SETTIMA®
research & innovation, always

GO SILENTLY AT HIGH PRESSURE & HIGH SPEED

INDUSTRIAL

MOBILE

MARINE

CONTINUUM® Series

Helical rotor pumps for high pressure and no noise application

The new generation of gear pumps for NO PULSATION & NO NOISE

QUALITY SYSTEM CERTIFICATION DNV·GL ISO 9001

www.settima.it

Continuum® pump / pompa Continuum®

Achieves better efficiency, lower production cost, better life quality for the industrial world.
Ottiene alti livelli di efficienza, ridotti costi di produzione ed una migliore qualità del lavoro.

Reducing noise in the workplace has become a necessity for many companies. By now most companies have recognized noise as a cost weighting on the economics of their businesses. Noise pollution remains a serious problem to be solved for both stationary and mobile machinery. Hydraulic pumps, above all those for high pressure, entail unacceptable noise and/or vibration levels in many different applications. Up to now the noise problem has always been approached in the only possible way: with secondary and expensive activities such as using pulsation dampers, hoses, damping rails and rings, encapsulating the hydraulic components or the entire system and so on. **SETTIMA** decided to start to design a new gear pumps generation capable to reduce as much as possible the acoustic emissions and the consequent vibration level. Some years ago the result was the **Continuum® pump series,** able to reduce down to 52 dB(A) the normal operation noise. Today **SETTIMA** presents the new generation of **Continuum® pumps**, silent as always, but much more efficient and with longer lifetime even at heavy duty, at all pressure and speed ranges.

The most important economic benefits of using **Continuum® pumps** are:
- very low pump pulsations reduce dramatically also vibrations with no dispersion of energy,
- saving money respect to the more expensive traditional pumps such as piston pumps and internal gear pumps,
- high volumetric efficiency, also at very low speed, contributes to cost reduction and also enables the pump to be driven by motor at a variable velocity with consequent energy saving,
- cost saving by eliminating second noise reduction measures,
- keeping the same external dimensions of gear pump, with no necessity to redesign the system in case of replacement.

COMPETITIVE ANALYSIS / *ANALISI COMPETITIVA*

Continuum® pump is a valid alternative to silently replace different traditional solutions of noisy high pressure pump.
Continuum® pump can replace the following types of high pressure pumps:
- External gear pumps
- Internal gear pumps
- Fixed displacement vane pumps
- Fixed displacement piston pumps

Please contact Settima for all information about any possible replacement.

ORIGIN OF NOISE AND VIBRATIONS KNOCKED DOWN BY CONTINUUM® PUMP / *LA POMPA CONTINUUM® HA ELIMINATO LE ORIGINI DEL RUMORE E DELLE VIBRAZIONI*

The typical sound emissions of gear pumps have two distinct origins: mechanical noise and hydraulic noise. The mechanical noise is what can be expected from any pair of gears. The hydraulic noise, however, is generated by the perturbations of fluid pressure through the pump. This noise and/or vibration comes from three basic components:
- cavitation, that can cause serious noise in addition to structural damage to mechanical components
- the peak pressure that arises from trapping of fluid between the top and the bottom of the tooth,
- the "ripple" or the flow pulsation during meshing that causes pressure pulsation.

The continuous contact helical rotor **Continuum® pump** has solved these problems with sophisticated and efficient systems.

THINK DIFFERENT: THE SILENT AND UNIQUE REVOLUTION OF CONTINUUM® PUMP / *UNA RIVOLUZIONE SILENZIOSA: LA POMPA CONTINUUM®*

As for classic gear pumps, the transport flow is perpendicular to the axes, but the rotors profile, specially developed and internationally patented, does not trap any volume since the helical design of the profile plays the role of completing an overlap, making a gentle transmission of fluid resulting in a dramatic reduction of pulsation. There is just a single point of contact between the profiles during rotation, which eliminates the pockets acting on the axial thrust washer and the noise associated with this problem.
The Continuum® core and its technological innovation is based on three patented breakthroughs:
- The rotor profile
- The screw step
- The inner force balancing.

MANUFACTURING ACCURACY IN ANY DETAILS / *MASSIMA ACCURATEZZA NEI DETTAGLI*

SETTIMA produces hydraulic no noise pumps since over thirty years, achieving a high level of competence and accuracy in the manufacture of high-precision hydraulic pump drives.

Together with top production machineries, efficient test environments, 3D drawing capability and special materials for rotors and bushings, **SETTIMA** constantly achieves products of high quality that is the industry standard.

CONTINUUM® PUMP ADVANTAGES / *VANTAGGI DELLA POMPA CONTINUUM®*

- Low noise also at high speed (up to 6.500 RPM).
- Average of 15dB(A) less noisy than standard external gear pumps.
- Reduced noise level for the machine operator and surroundings.
- Cost saving by eliminating second noise reduction measures.
- Easy to replace - compatibile with all external gear pumps.
- Helps meet legal noise requirements.
- Continuous variable flow rate (0% to 100%).
- Intermittent operation at high pressure & low speed.
- High volumetrical efficiency.

PULSATIONS LEVEL GRAPH / *GRAFICO PULSAZIONI* (100 bar - 40 cSt - 1.500 rpm)

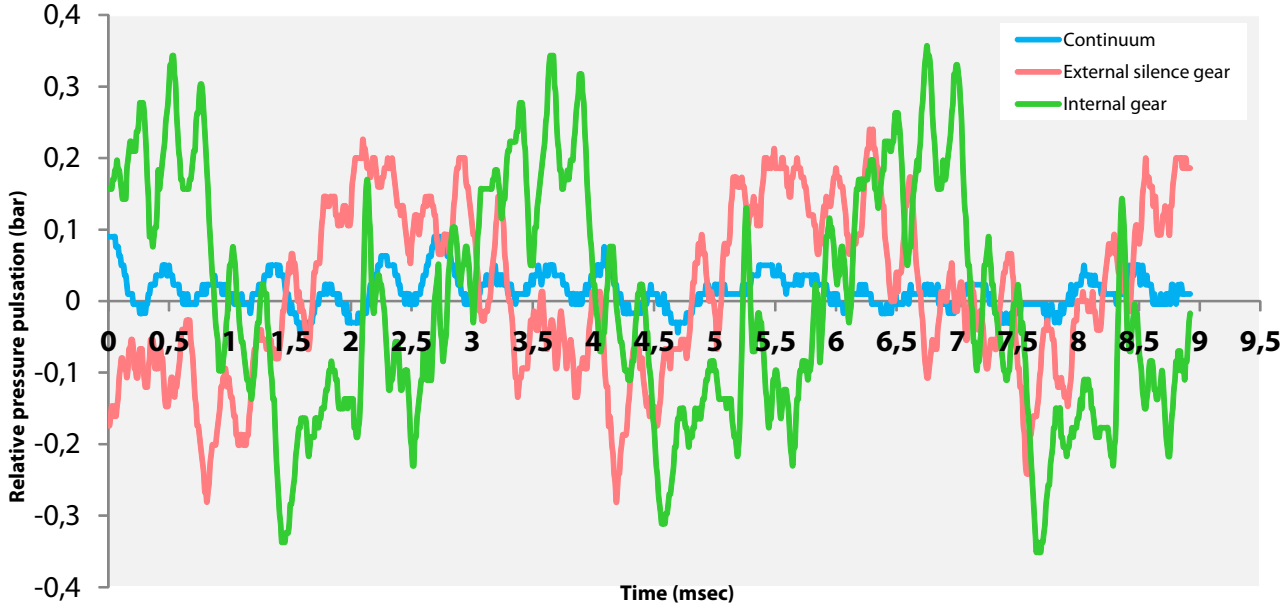

NOISE LEVEL GRAPH / *GRAFICO EMISSIONI ACUSTICHE* (150 bar)

GR 28

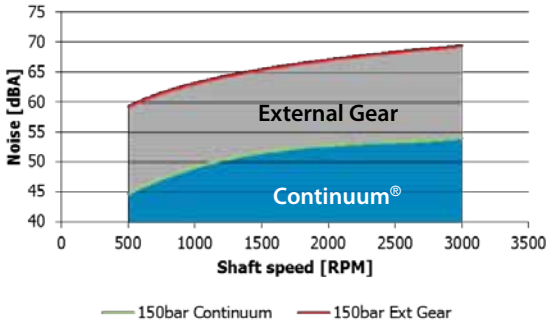

GR 33 - 38

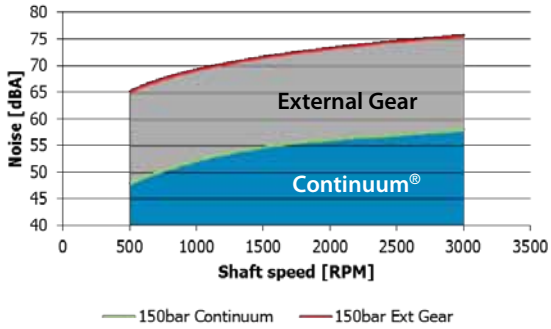

GR 47 - 55

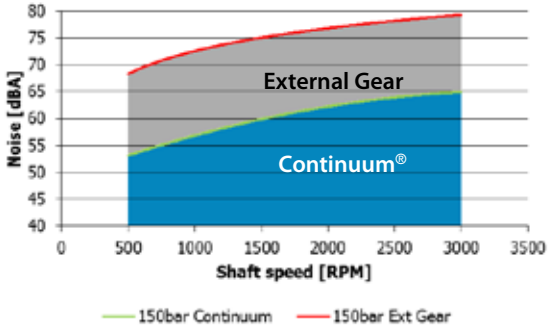

GR 72

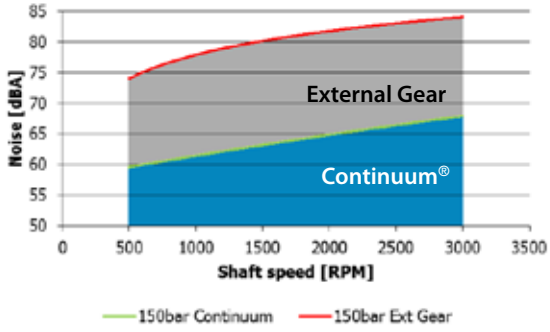

Pump displacements / *Cilindrate*

Group 1

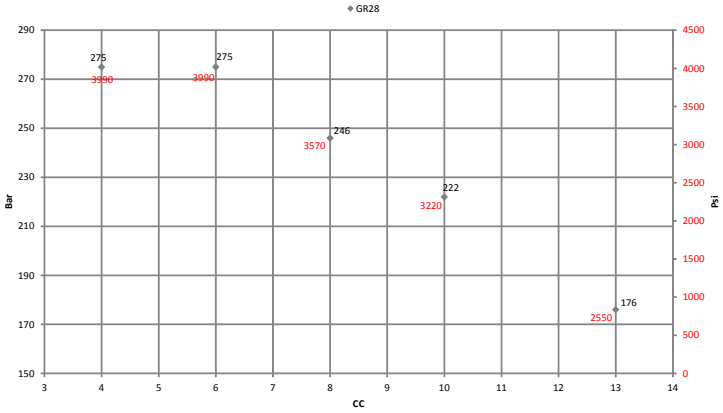

Group 2

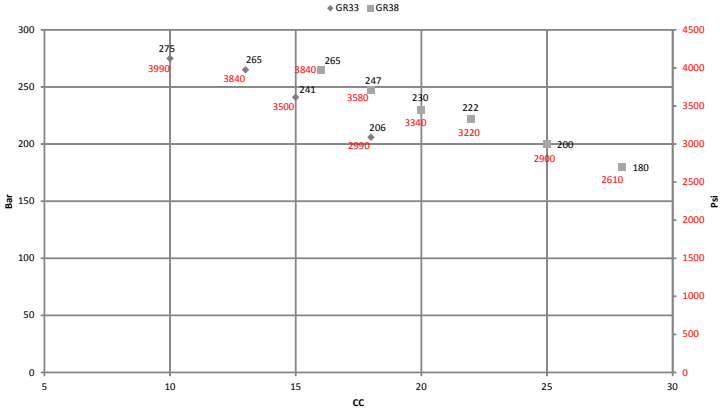

Group 3

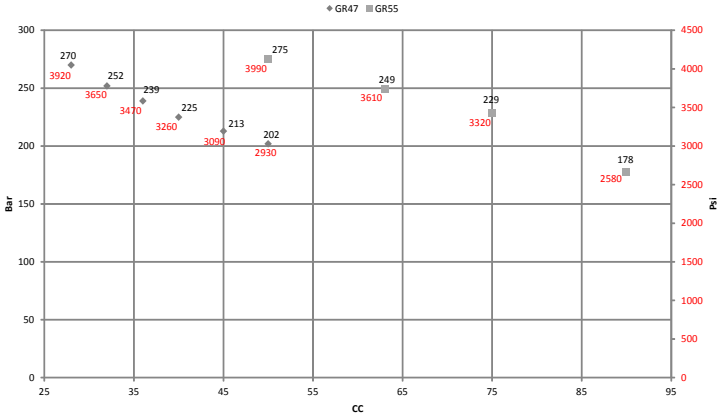

Group 4

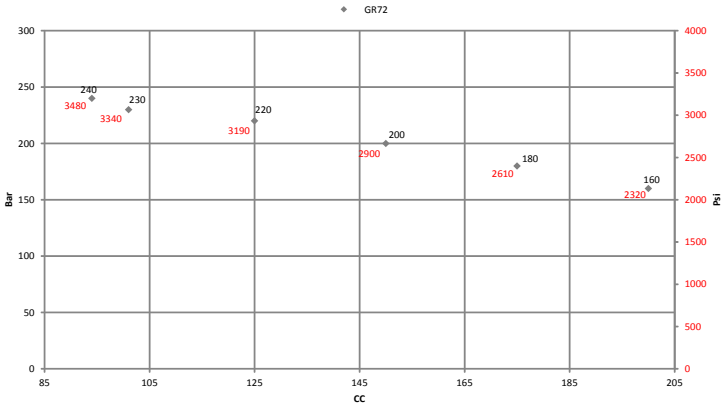

SETTIMA
research & innovation, always

Applications / Applicazioni

INDUSTRIAL

Machine tools lubrication systems.

Lifting equipment, hydraulic systems for dock-levelers.

Hydraulic transmission systems.

Machines lubrication.

Chemical metering.

Hydraulic systems for injection moulding machines, presses, compactors and balers.

Systems for lubrication and cooling of gearboxes and bearings.

Hydraulic powerpack.

Hydro power.

Feeder system for filter circuits, cooling circuits, lubrication applications, pump transfer unit.

MOBILE

Ground-handling equipment.

Agricultural machinery.

Hydraulic systems for parking systems.

Steering units.

Torque converters & powershift transmissions.

Street-sweeping vehicles.

Shredder systems.

Waste container level lifter.

ENVIRONMENTAL INDUSTRY

Baler and compacting of waste.

Containers.

Hooklift containers.

Back loading containers.

Front loading containers.

Liftdumper containers.

Hooklift systems.

Garbage trucks.

Mobile compactors.

Stationary compactors.

MARINE

Marine power hydraulics.

Rudder actuators (tandem system).

Propeller pitch control.

Propeller drive (power transmission from engine).

Rotary vane steering gears.

Minipowerpacks (dock operation, door control).

Yacht building industry (lifting systems: fly bridge cranes, tenderlift, elevator, walkways, automatic swimming ladders, side boarding ladders, pitch controls and operations, hydraulic davits).

Technical characteristics / Caratteristiche tecniche

SPECIAL HELICAL ROTORS – CONTINUUM® represents an innovative and revolutionary gear pump. The patented profile of the **Continuum®** rotors permits just a single point of contact between gears: this results, together with a particular screw step and inner force balancing, in the total absence of trapped and compressed oil, and leads to no noise and no pulsation.

HIGH PRESSURE – CONTINUUM® has been designed for high pressure, high speed and heavy duty.

TANDEM GROUP – CONTINUUM® can be also assembled as a double pump, connecting two pumps from different groups: from group 1 to group 4.

Technical characteristics

Models / *Modelli*	28 - 33 -38 - 47 - 55 - 72 - 92* - 106*	
Flanges ***Flange***	Group 1 – Group 2 (European, German, BKT, SAE-A) – Group 3 (European, SAE-B) – Group 4 (SAE-D) *Gruppo 1 – Gruppo 2 (Europeo, Tedesco, BKT, SAE-A) – Gruppo 3 (Europeo, SAE-B) – Gruppo 4 (SAE-D)*	
Connections ***Connessioni***	BSPP (GAS) – SAE 3000/6000 PSI – FL 4 HOLES M6 SU Ø40 DN20 (mentioned connections depend on model) *BSPP (GAS) – SAE 3000/6000 PSI – FL 4 HOLES M6 SU Ø40 DN20 (in base al modello)*	
Installation position ***Posizione di installazione***	External and/or under oil *Esterna e/o immersa*	
Shaft rotation ***Rotazione***	Clockwise (please contact Settima for counter clockwise) *Destra (contattare Settima per sinistra)*	
Shaft speed ***Velocità di rotazione***	From 150 to 6.500 rpm (for usage below 1.000 rpm or over 1.800 rpm please contact Settima) *Da 150 a 6.500 rpm (per utilizzi a giri inferiori a 1.000 rpm o superiori a 1.800 rpm contattare Settima)*	
Flows ***Portate***	From 6 L/min up to 330 L/min (at 1.500 rpm) *Da 6 L/min fino a 330 L/min (a 1.500 rpm)*	From 1.585 GPM up to 87.176 GPM (at 1,500 rpm)
Operating pressure ***Pressione operativa****	Max. Continuous: 275 bar/3,988.5 PSI Max. Cycle ON/OFF: 280 bar/4,061 PSI Max. Peak: 300 bar/4,351.1 PSI	*Max. Continuo: 275 bar* *Max. Ciclo ON/OFF: 280 bar* *Max. Picco: 300 bar*
Inlet pressure ***Pressione di aspirazione****	0,8 – 3 bar	11,603 - 43,511 PSI
Fluids ***Fluidi***	- Mineral oil - Synthetic oil	*- Olio minerale* *- Olio sintetico*
Viscosity ***Viscosità***	Possible: from 5 up to 800 cSt** Recommended: from 32 up to 150 cSt Starting condition: up to 3.000 cSt**	*Consentita: da 5 fino a 800 cSt*** *Raccomandata: da 32 fino a 150 cSt* *Condizioni di avviamento: fino a 3.000 cSt***
Environmental temperature ***Temperatura ambiente***	From -15°C up to +60°C *Da -15°C a +60°C*	
Oil temperature ***Temperature olio***	From -15°C up to +80°C*** *Da -15°C a +80°C****	
Contamination level ***Livello di contaminazione***	Up to 8 NAS (18/17/14 ISO4406) (for heavy duty operations over 150 bar, over 4 working hours/day, 100 cycle/day oil ISO 46) *Fino a 8 NAS (18/17/14 ISO4406) (per lavoro ad alto sforzo oltre 150 bar, oltre 4 ore lavorative/giorno, 100 cicli/giorno olio ISO 46)*	
Filtration ***Filtrazione***	From 25 to 10 µm (for heavy duty operations over 150 bar, over 4 working hours/day, 100 cycle/day oil ISO 46) *Da 25 a 10 µm (per lavoro ad alto sforzo oltre 150 bar, oltre 4 ore lavorative/giorno, 100 cicli/giorno olio ISO 46)*	
Seals ***Guarnizioni***	NBR, FKM (others on request) *NBR, FKM (altri a richiesta)*	
Acoustic emissions ***Emissioni acustiche***	From 52 up to 63 db(A) at 2.950 rpm *Da 52 fino a 63 db(A) at 2.950 rpm*	
Flanges material ***Materiale delle flange***	Cast iron *Ghisa*	
Pump body / *Corpo*	Extruded aluminium alloy / *Alluminio estruso*	
Screws / *Viti*	Hardened steel / *Acciaio temprato*	

* Model GR92 and GR106 will be available soon. *I modelli GR92 e GR106 saranno disponibili a breve.*
** Please for more information about possible and starting conditions of viscosity contact Settima. *Contattare Settima per maggiori informazioni sui livelli di viscosità possibili e quelli delle condizioni di inizio lavoro.*
*** For higher temperature than 80°C, please, contact Settima. *Per temperature superiori a 80° C, contattare Settima.*
**** Depending on models. */ In base al modello*

System requirements / Requisiti del sistema

Inlet pressure

The inlet vacuum must be controlled within the prescribed range in order to achieve the expected pump life and performance. The system design must meet inlet pressure requirements during all modes of operation.

Peak pressure is the highest intermittent pressure allowed. The reaction time of the pressure relief valve determines the duration of operation at pressure above the rated value. The maximum time interval is 100 ms. The illustration to the right shows peak pressure in relation to rated pressure and reaction time (100 ms maximum).

Rated pressure is the average, regularly occurring, operating pressure that does not compromise the product's life and performance.

System pressure is the pressure differential between the outlet and inlet ports. System pressure must remain at, or below, the rated pressure during normal operation to achieve expected life.

Max. continuous vacuum	bar abs. [in. Hg]	0.8 [23.6]
Max. intermittent vacuum		0.6 [17.7]
Max. pressure		3.0 [88.5]

Time versus pressure

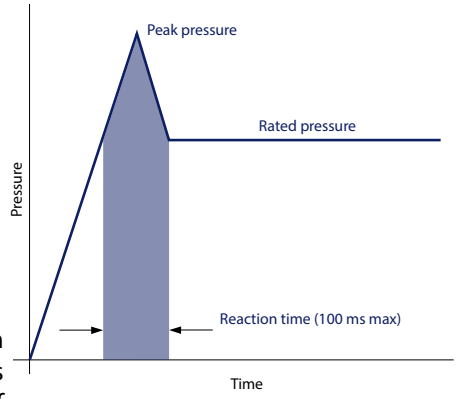

Hydraulic fluids

Ratings and data for Continuum® pumps are valid for operation with premium hydraulic fluids containing oxidation, rust, and foam inhibitors. These fluids must possess good thermal and hydrolytic stability to prevent wear, erosion, and corrosion of internal components. They include:

- Hydraulic fluids following DIN 51524, part 2 (HLP) and part 3 (HVLP) specifications
- API CD engine oils conforming to SAE J183
- M2C33F or G automatic transmission fluids
- Certain agricultural tractor fluids

Use only clean fluid in the pump and hydraulic circuit. Never mix hydraulic fluids.

Temperature and viscosity

Temperature and viscosity requirements must be concurrently satisfied. Use petroleum / mineral-based fluids.

High temperature limits apply at the inlet port to the pump. The pump should run at or below the maximum continuous temperature. The peak temperature is based on material properties. Don't exceed it. Cold oil, generally, doesn't affect the durability of pump components. It may affect the ability of oil to flow and transmit power. For this reason, keep the temperature at 16 °C [60 °F] above the pour point of the hydraulic fluid.

Minimum (cold start) **temperature** relates to the physical properties of component materials.

Minimum viscosity occurs only during brief occasions of maximum ambient temperature and severe duty cycle operation. You will encounter maximum viscosity only at cold start. During this condition, limit speeds until the system warms up. Size heat exchangers to keep the fluid within these limits. Test regularly to verify that these temperatures and viscosity limits aren't exceeded. For maximum unit efficiency and bearing life, keep the fluid viscosity in the recommended viscosity range.

Fluid viscosity

Maximum (cold start)	mm^2/s [SUS]	3000 [13904]
Recommended range		32-150** [148-695]
Minimum		5 [23]

Temperature

Minimum (cold start)	°C [°F]	-15 [-4]
Maximum continuous		50* [122]
Peak (intermittent)		90* [176]

*For higher temperature than 50°C, please contact Settima.
**For viscosity value out of this range, please contact Settima.

Filtration

A Class 18/17/14 of ISO 4406 (or better) filter must be used.

Selecting a filter

When selecting a filter, please consider:

- Contaminant ingression rate
  (determined by factors such as the number of actuators used in the system)
- Generation of contaminants in the system
- Required fluid cleanliness

- Desired maintenance interval
- Filtration requirements of other system components

Measure filter efficiency with a Beta ratio (β_X). For:

- Suction filtration, with controlled reservoir ingression, use a $\beta_{35\text{-}45} = 75$ filter
- Return or pressure filtration, use a pressure filtration with an efficiency of $\beta_{10} = 75$.

βx ratio is a measure of filter efficiency defined by ISO 4572. It is the ratio of the number of particles greater than a given diameter ("$_x$" in microns) upstream of the filter to the number of these particles downstream of the filter.

Fluid cleanliness level and βx ratio

Fluid cleanliness level (per ISO 4406)	Class 18/17/14 or better
β_x ratio (suction filtration)	$\beta_{35\text{-}45} = 75$ and $\beta_{10} = 2$
β_x ratio (pressure or return filtration)	$\beta_{10} = 75$
Recommended inlet screen size	100-125 µm [0.004-0.005 in]

The filtration requirements for each system are unique. Evaluate filtration system capacity by monitoring and testing prototypes.

Reservoir

The **reservoir** provides clean fluid, dissipates heat, removes entrained air and makes up for changes in fluid volume due to fluid expansion-contraction and flow imbalances associated with differential cylinders. A correctly sized reservoir accommodates maximum volume changes during all system operating modes. It promotes de-aeration of the fluid as it passes through, and accommodates a fluid dwell-time between 60 and 180 seconds, allowing entrained air to escape.

Hydraulic oil contains 10% of dissolved air by volume in normal conditions and the system should be design in order to avoid any over-areation of the hydraulic fluid, to limit any air release at the inlet port.

Minimum reservoir capacity depends on the volume required to cool and hold the oil from all retracted cylinders, allowing for expansion due to temperature changes. A fluid volume of 1 to 3 times the pump output flow (per minute) is satisfactory. The minimum reservoir capacity is 125% of the fluid volume.

The suction line shall be installed above the bottom of the reservoir to take advantage of gravity separation and prevent large foreign particles from entering the line. Cover the line with a 100-125 micron screen. The pump should be below the lowest expected fluid level. Put the return-line below the lowest expected fluid level to allow discharge into the reservoir for maximum dwell and efficient deaeration. A baffle (or baffles) between the return and suction lines promotes deaeration and reduces fluid surges.

Pump drive

Shaft options for Continuum® pumps include tapered, tang, splined, or parallel shafts. They are suitable for a wide range of direct and indirect drive applications for radial and thrust loads.

Plug-in drives, acceptable only with a splined shaft, can impose severe radial loads when the mating spline is rigidly supported. Increasing spline clearance does not alleviate this condition. Use plug-in drives if the concentricity between the mating spline and pilot diameter is within 0.1 mm [0.004 in]. Lubricate the drive by flooding it with oil. A 3-piece coupling minimizes radial or thrust shaft loads. In order to avoid spline shaft damages it is recommended to use carburized and hardened steel couplings with 60-62 HRC surface hardness.

Allowable **radial shaft loads** are a function of the load position, load orientation, and operating pressure of the hydraulic pump. All external shaft loads have an effect on bearing life, and may affect pump performance.

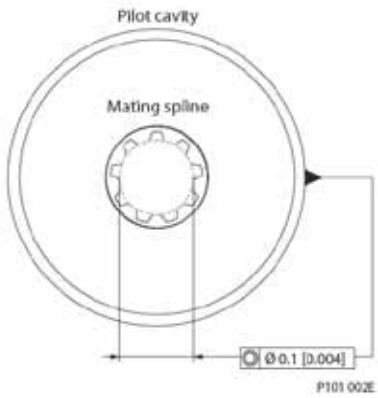

Pump life

Pump life is a function of speed, system pressure, and other system parameters (such as fluid quality and cleanliness). All Continuum® pumps use hydrodynamic journal bearings that have an oil film maintained between the gear/shaft and bearing surfaces at all times. If the oil film is sufficiently sustained through proper system maintenance and operating within recommended limits, long life can be expected. B10 life expectancy number is generally associated with rolling element bearings. It does not exist for hydrodynamic bearings. High pressure, resulting from high loads, impacts pump life. When submitting an application for review, provide machine duty cycle data that includes percentages of time at various loads and speeds. We strongly recommend a prototype testing program to verify operating parameters and their impact on life expectancy before finalizing any system design.

SETTIMA® research & innovation, always

Continuum® Servo drive pumps

Servo drive systems: easy, no noise, fast and energy saving.

Hydraulic press servo drives have been on the market since many years already. In Asia most of the market of plastic injection molding machines is using variable servo drive motors and fixed displacement pumps, like external gear, vane or internal gear pumps. The usage of this type of systems enables **energy savings up to 65%** when compared to conventional drive systems (fixed speed motor and variable displacement hydraulic pumps). Today, more than 100.000 servo drive systems are used in the manufacturing process of hydraulic presses.
This kind of systems, while reaching real energy savings, also enables **huge simplifications of the hydraulic circuits**: no more proportional valves or complicated hydraulic pressure feedback are needed to control the press actions and cycles. Servo pump systems use motor speed between nearly 0 and 3.000 RPM, to enable very fast movement of the molds and a high cycle dynamics.

The noise of hydraulic pumps is the issue, Continuum® is the solution.

The real innovation in the pump market is the **Continuum® pump.**
Continuum® is on the market since early 2004 and brought Settima to the very top amongst manufacturers of silent components establishing a new high standard that all competitors struggle to reach but without success.
This technology cuts the noise at the root: the profile of the rotors has been engineered to reach **no-noise** and **no-pulsations**. The **Continuum® servo pump** is used in the market of presses since 2008, enabling the press designers to reach wide speed dynamics in heavy duty pressing cycles without noise.
Settima package is suitable for **press modernization and revamping**. It's possible to remove all of the old and noisy hydraulic components and to replace them with our system, making the old machines more flexible and quieter than ever.

Continuum® Servo Drive pump

The Continuum® servo drive pump possible applications:

PLASTICS

Plastic injection molding machines,
Plastic injection machines retrofitting,
Blow molding machines,
Rubber presses.

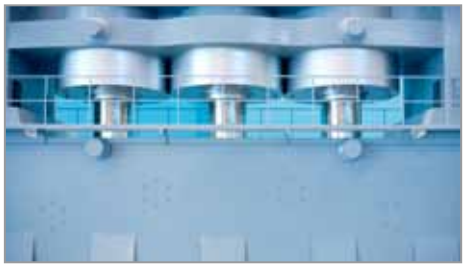

PRESSES

Hydraulic presses,
Press modernization and revamping.

ENVIRONMENTAL INDUSTRY

Balers,
Waste compactors.

The Continuum® servo drive pump advantages & economical benefit	
Variable servo drive motors + Gear pump	• Enables **energy savings** up to **65%** • **Simplification** of the hydraulic circuits • More **compact** hydraulic units, up to 80% less space needed
High pressure and flow control through gear pumps	• No more need for **proportional valves** • Significant **reduction** of all **operating cost**
Special profile of the rotors	• **No-noise** and • **No-pulsations** • **No noise reduction measures needed** to fulfill the Occupational Guidelines

Continuum® Servo drive pumps

The Continuum® servo drive pump can be equipped with (optional):

- Accumulator: the bypass valve never reacts with the same dynamic and speed of the **Continuum® servo drive pump**. The accumulator catches the risky pressure peaks.
- Pressure line filter.
- Non return valve: to make the management of pressure "holding" phases stronger.
- Inline pressure and temperature sensor: to enable quick and easy installation.
- Servo drive and motor: can be supplied by **Settima** (many brands are available). This enables a better management of the electronic components maintenance and service programs of the machines of our customer.

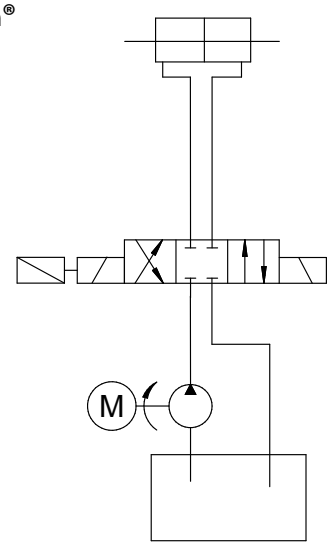

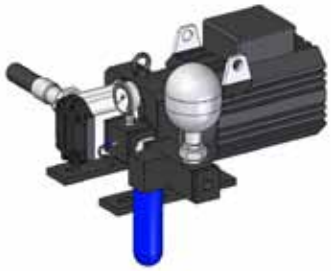

The below graphs show two real examples of PIMM working cycles with Continuum® servo drive pump.

Ex. 1

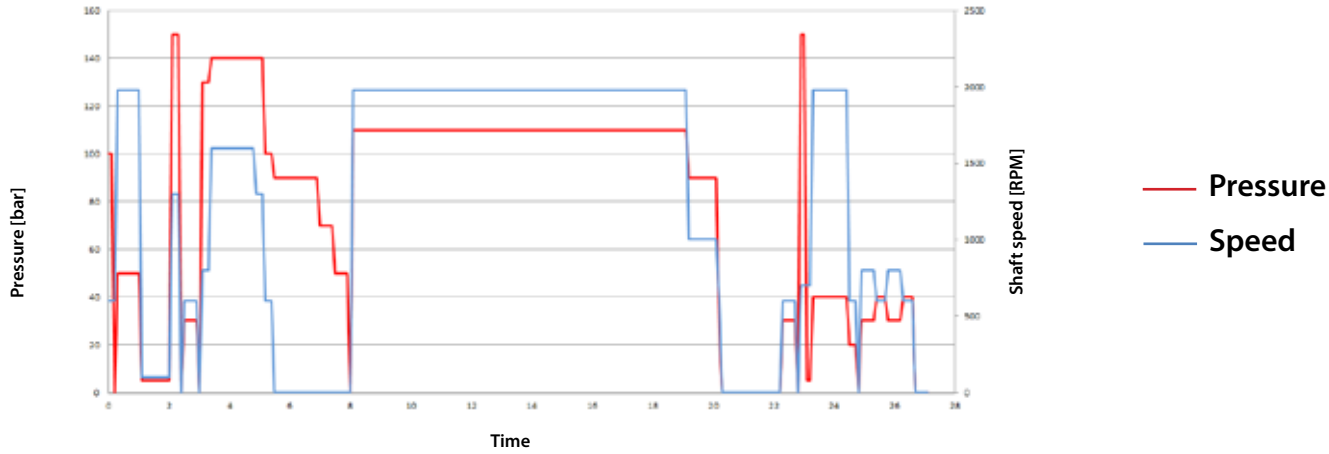

Ex. 2

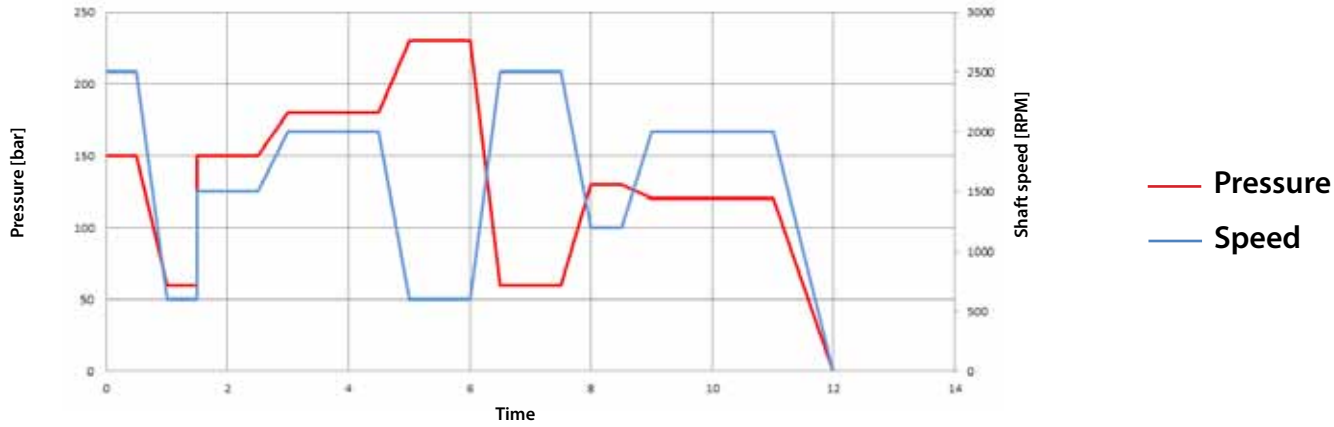

Product description / Descrizione prodotto

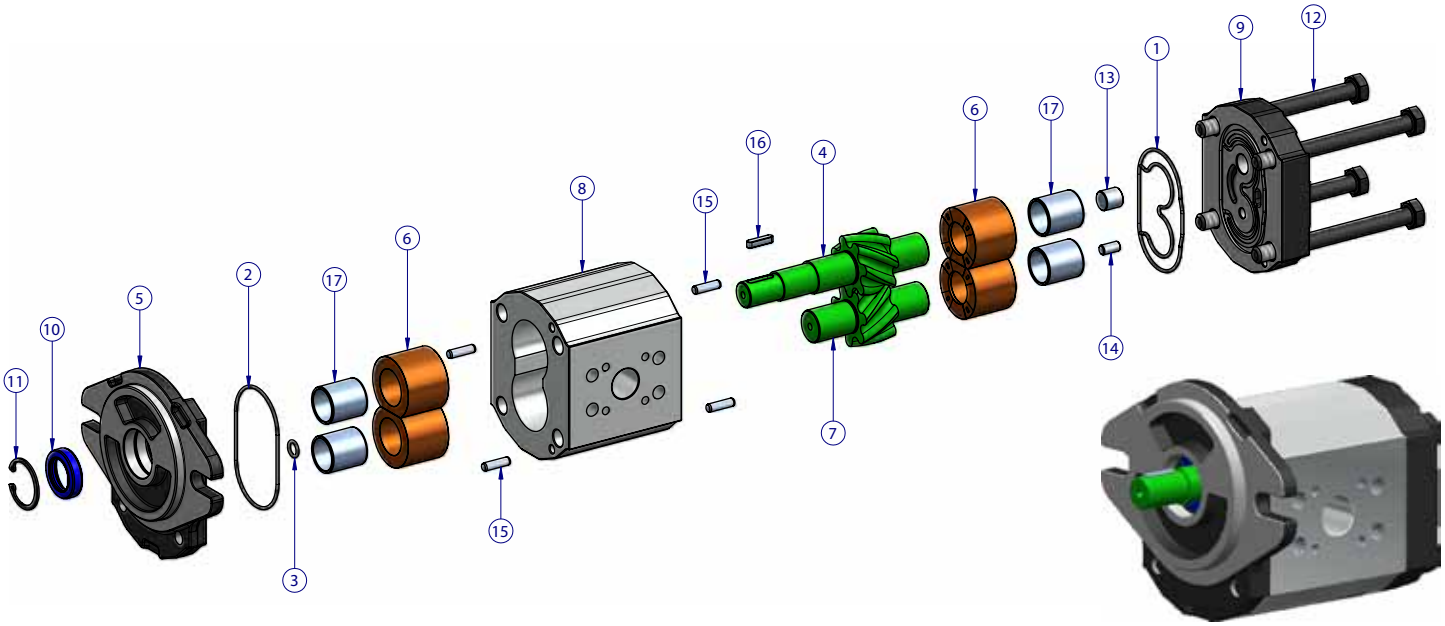

N°	DESCRIPTION/DESCRIZIONE	MATERIAL / MATERIALE
1	O-ring seal / O-ring	NBR
2	O-ring seal / O-ring	NBR
3	O-ring seal / O-ring	NBR
4	Driving Continuum® rotor / *Rotore guida Continuum®*	Hardened steel / *Acciaio temprato*
5	Motor flange / *Flangia motore*	Cast iron / *Ghisa*
6	Ring for bush / *Anello porta boccola*	Aluminium / *Alluminio*
7	Driven Continuum® rotor / *Rotore guidato Continuum®*	Hardened steel / *Acciaio temprato*
8	Body / *Corpo*	Extruded aluminum alloy / *Alluminio estruso*
9	Cover flange / *Flangia*	Cast iron / *Ghisa*
10	Seal / *Anello di tenuta*	NBR
11	Seeger / *Seeger*	Steel / *Acciaio*
12	Screws / *Viti di fissaggio*	Steel / *Acciaio*
13	Piston / *Pistone*	Steel / *Acciaio*
14	Piston / *Pistone*	Steel / *Acciaio*
15	Centring Keys / *Spine di centraggio*	Steel / *Acciaio*
17	Bushings / *Boccole*	Steel / *Acciaio*

Standard type and options

	STANDARD MATERIAL	OPTIONAL MATERIAL
Body / *Corpo*	Alluminium / *Alluminio*	Cast iron / *Ghisa*
Seal kit	NBR	FKM
Bushings / *Boccole*	Alluminium / *Alluminio*	Bronze / *Bronzo*

Ordering code / Codice ordine

Single pump / *Pompa singola*

Type *Tipo*	Class *Classe*	Displacement *Cilindrata*	Flange & shaft *Flangia & albero*	Ports *Porte*	Shaft seal *Guarnizione albero*	Rotation *Rotazione*
GR28	2V	004-006-008-010-013	F1AC3-F1PAC2-F1KAG54-F1LAGL54-FSAEAAC-F1KAGL54	G-U	Standard NBR **(none)** Optional FKM **V**	Standard DX **(none)** Optional **SX***
GR33	2C	010-013-015-018	F2AC4-F2BK7AG-FSAEAAC-FSAEAAT9	G-Q-U		
GR38	2C	016-018-020-022-025-028	F2AC4-F2BK7AG-FSAEAAC-FSAEAAT11-FSAEAAT9	G-Q-U		
GR47	2C	028-032-036-040-045-050	F3AC9-FSAEBAC-FSAEBAT13	G-O-U		
GR55	2C	050-063-075-090	FSAEBAC-FSAEBAT15	O-OE		
GR72	2V	094-101-125-150-175-200-220	FSAEDAC-FSAEDAT23	ME		

* Please Contact Settima for SX counter clockwise optional rotation.
Contattare Settima per rotazione SX opzionale.

DIRECTION OF ROTATION / *SENSO DI ROTAZIONE*

Continuum® pumps are available with right rotation as standard configuration and left rotation as optional configuration. Right hand rotation means that, when standing in front of the pump, with driving shaft towards to the observer, the pump is rotating clockwise (DX). The other way around with left hand rotation, counter clockwise (SX).
Le pompe **Continuum®** *sono fornite con la configurazione standard di rotazione destra. Opzionale la rotazione sinistra. Con rotazione destra (DX) si intende che, guardando la pompa frontalmente, con l'albero conduttore sporgente verso il punto di osservazione, la rotazione sarà in senso orario, con il lato mandata sulla destra e il lato aspirazione sulla sinistra della pompa. Viceversa per quanto riguarda la rotazione sinistra (SX).*

Continuum® pumps, despite the type of configuration , can rotate to the opposite side if the pressure is not higher than 10% of maximum continuous pressure (check the Technical Characteristics table).
Le pompe **Continuum®**, *qualunque configurazione di rotazione abbiano, possono ruotare in senso inverso a pressioni non superiore al 10% della massima pressione continua (verificare nella tabella delle caratteristiche tecniche).*

DX: Clockwise rotation / *Rotazione destra*

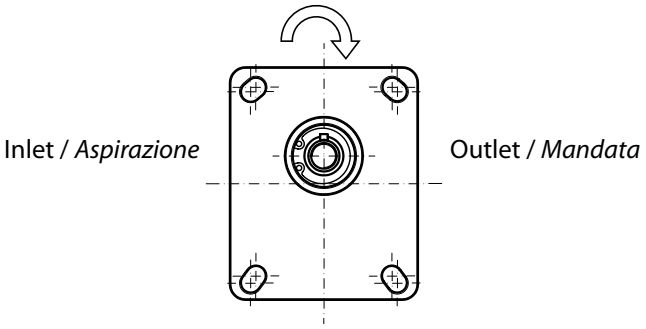

SX: Counter clockwise rotation / *Rotazione sinistra*

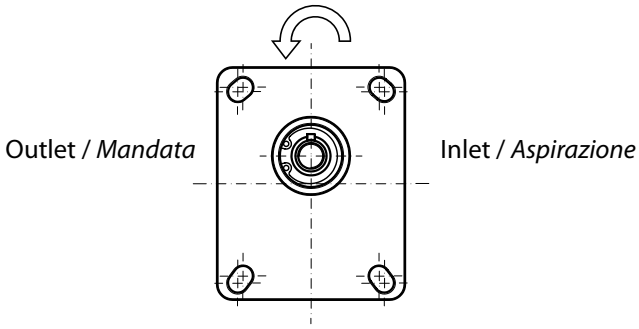

Variant codes for ordering integral relief valves*

The tables below detail the various codes for ordering integral relief valves.

R:

Code	Pump speed for RV setting
C	500 min^{-1} (rpm)
E	1000 min^{-1} (rpm)
F	1250 min^{-1} (rpm)
G	1500 min^{-1} (rpm)
K	2000 min^{-1} (rpm)
I	2250 min^{-1} (rpm)
L	2500 min^{-1} (rpm)
M	2800 min^{-1} (rpm)
N	3000 min^{-1} (rpm)
O	3250 min^{-1} (rpm)

Code	Pressure setting
18	18 bar [261 psi]
30	30 bar [435 psi]
40	40 bar [580 psi]
50	50 bar [725 psi]
60	60 bar [870 psi]
70	70 bar [1015 psi]
80	80 bar [1160 psi]
90	90 bar [1305 psi]
100	100 bar [1450 psi]
120	120 bar [1740 psi]
140	140 bar [2030 psi]
160	160 bar [2320 psi]
180	180 bar [2611 psi]
210	210 bar [3046 psi]
250	250 bar [3626 psi]

Integral relief valve schematic

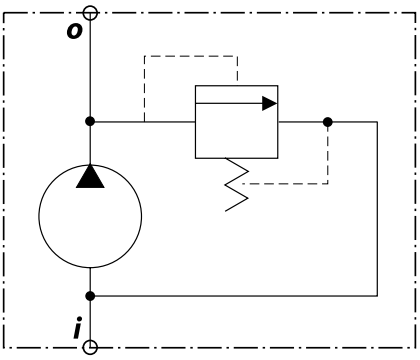

* Please, contact Settima for this option.

GR28 - Dimensional drawings / Disegni dimensionali

GR28 SHAFT AND FLANGE TYPES AND DIMENSIONS / *TIPI DI ALBERO E FLANGIA E DIMENSIONI*

Group 1 pumps / *Pompe gruppo 1*

Type	Class	Flange & Shaft available types	Ports	Weight
GR28	2V	F1 AC3	G-U	2 Kg
		F1P AC2		
		F1K AG54		
		F1K AGL54		
		F1L AG54		
		F1L AGL54		
		FSAEAA AC		

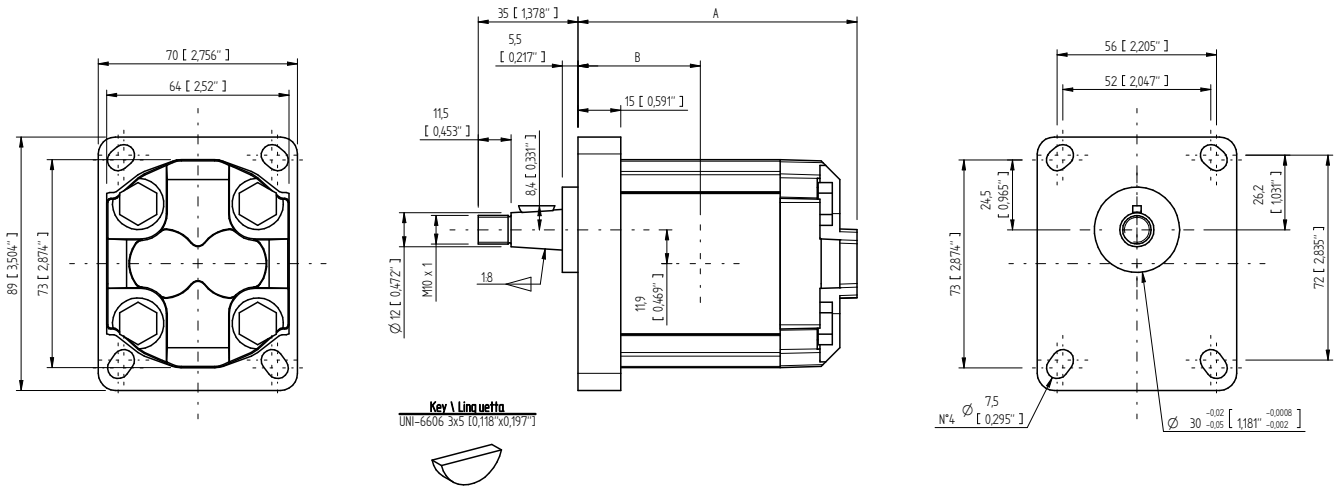

GR28 - TYPE / *TIPO* F1 AC3															
Type *Tipo*	CC	Flow Portata		Dimensions A *Dimensioni A*		Dimensions B *Dimensioni B*		Continuous Pressure *Pressione continua*		Intermittent Pressure *Pressione intermittente* (*)		Peak pressure *Picco pressione (*)*		Noise level *Livello rumore*	Max torque *Coppia max*
		L/min	GPM	mm	inc	mm	inc	bar	PSI	bar	PSI	bar	PSI	*dB*	*Nm*
4	4,2	6	1,585	101	3,976	44,5	1,752	275	3989	280	4061	300	4351	55	100
6	6,4	9,2	2,430	106,5	4,193	47,25	1,860	275	3989	280	4061	300	4351		
8	8,3	12	3,170	111,5	4,390	49,75	1,959	246	3568	260	3771	280	4061		
10	10,2	14,7	3,883	116,5	4,587	52,25	2,057	222	3220	250	3626	270	3916		
13	12,9	18,6	4,914	123,4	4,858	55,7	2,193	176	2553	230	3336	250	3626		

Max torque / *Coppia max:* 100 Nm

* Intermittent: cycle 20 sec. ON & 3 sec. OFF - Peak: cycle 1 sec. ON & 3 sec OFF. Intermittente: ciclo 20 sec. ON & 3 sec. OFF - Picco: ciclo 1 sec. ON & 3 sec OFF

SETTIMA research & innovation, always

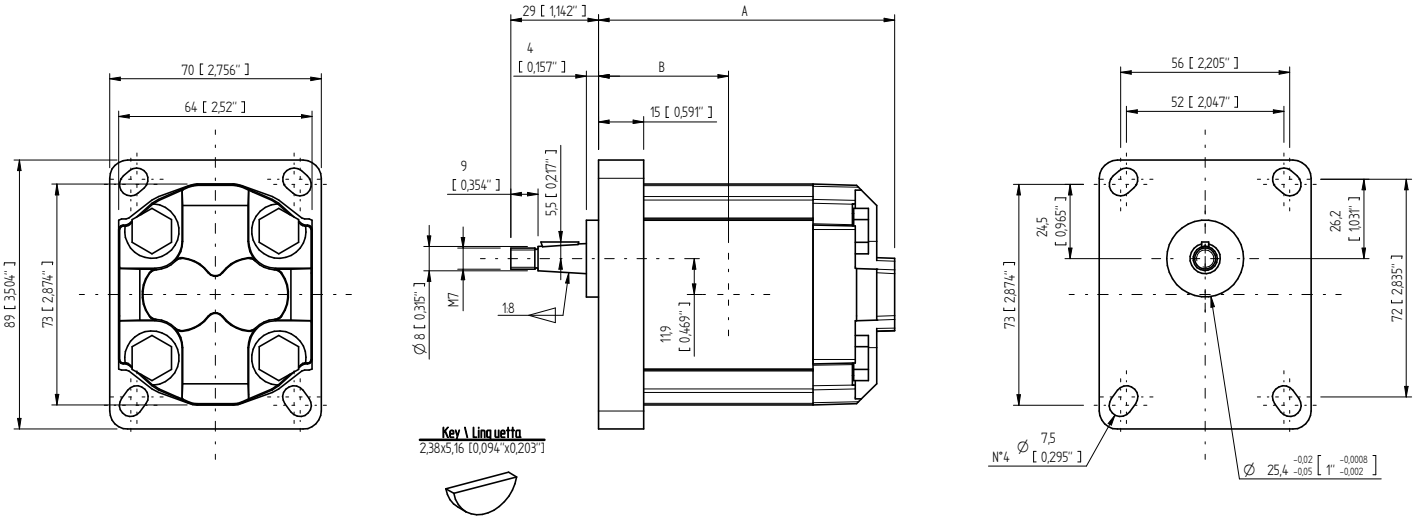

GR28 - TYPE / *TIPO* F1P AC2															
Type *Tipo*	**CC**	**Flow** **Portata**		**Dimensions A** *Dimensioni A*		**Dimensions B** *Dimensioni B*		**Continuous Pressure** *Pressione continua*		**Intermittent Pressure** *Pressione intermittente* (*)		**Peak pressure** *Picco pressione (*)*		**Noise level** *Livello rumore*	**Max torque** *Coppia max*
		L/min	**GPM**	**mm**	**inc**	**mm**	**inc**	**bar**	**PSI**	**bar**	**PSI**	**bar**	**PSI**	***dB***	***Nm***
4	4,2	6	1,585	101	3,976	44,5	1,752	240	3481	260	3771	280	4061		
6	6,4	9,2	2,430	106,5	4,193	47,25	1,860	230	3336	240	3481	270	3916		
8	8,3	12	3,170	111,5	4,390	49,75	1,959	200	2901	210	3046	220	3191	55	50
10	10,2	14,7	3,883	116,5	4,587	52,25	2,057	160	2321	170	2466	180	2611		
13	12,9	18,6	4,914	123,4	4,858	55,7	2,193	140	2031	150	2176	160	2321		

Max torque / *Coppia max:* 50 Nm

* Intermittent: cycle 20 sec. ON & 3 sec. OFF - Peak: cycle 1 sec. ON & 3 sec OFF. Intermittente: ciclo 20 sec. ON & 3 sec. OFF - Picco: ciclo 1 sec. ON & 3 sec OFF

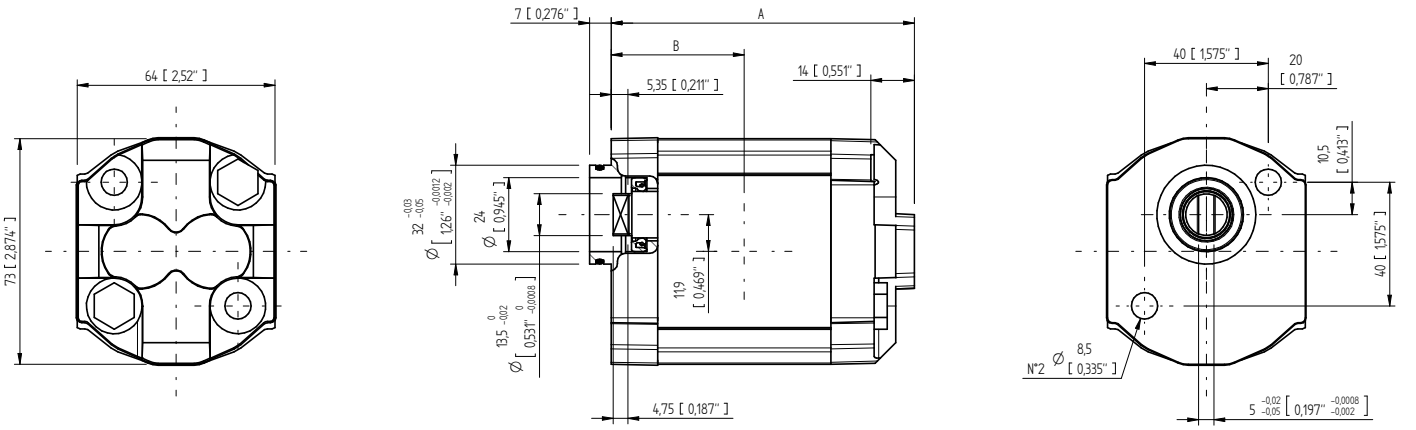

GR28 - TYPE / *TIPO* F1K AG54															
Type *Tipo*	**CC**	**Flow** **Portata**		**Dimensions A** *Dimensioni A*		**Dimensions B** *Dimensioni B*		**Continuous Pressure** *Pressione continua*		**Intermittent Pressure** *Pressione intermittente* (*)		**Peak pressure** *Picco pressione (*)*		**Noise level** *Livello rumore*	**Max torque** *Coppia max*
		L/min	**GPM**	**mm**	**inc**	**mm**	**inc**	**bar**	**PSI**	**bar**	**PSI**	**bar**	**PSI**	***dB***	***Nm***
4	4,2	6	1,585	101	3,976	44,5	1,752	275	3989	280	4061	300	4351		
6	6,4	9,2	2,430	106,5	4,193	47,25	1,860	230	3336	240	3481	270	3916		
8	8,3	12	3,170	111,5	4,390	49,75	1,959	180	2611	200	2901	210	3046	55	40
10	10,2	14,7	3,883	116,5	4,587	52,25	2,057	150	2176	160	2321	170	2466		
13	12,9	18,6	4,914	123,4	4,858	55,7	2,193	120	1740	130	1885	140	2031		

Max torque / *Coppia max:* 40 Nm

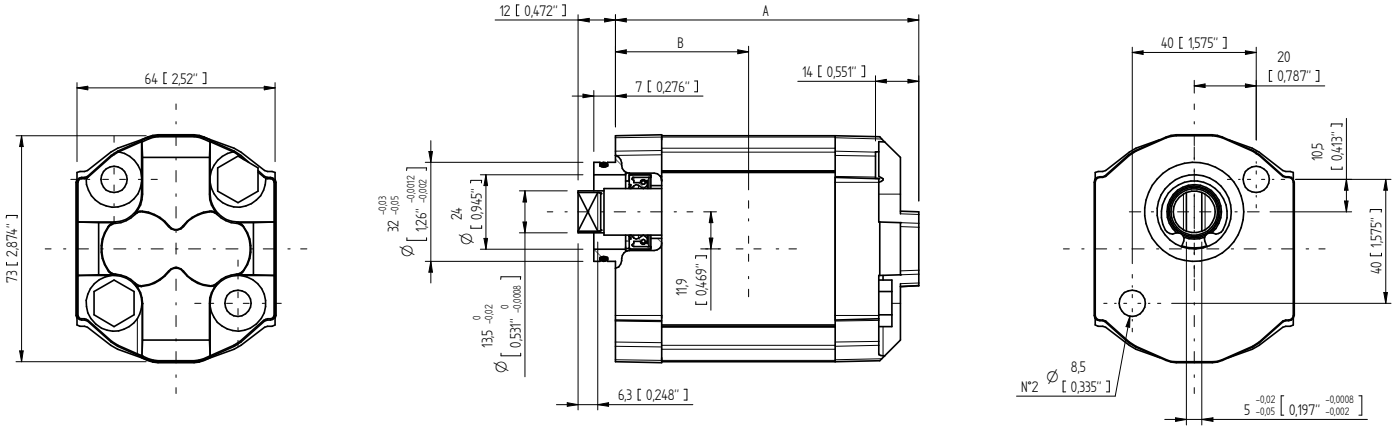

GR28 - TYPE / *TIPO* F1K AGL54															
Type *Tipo*	**CC**	**Flow Portata**		**Dimensions A** *Dimensioni A*		**Dimensions B** *Dimensioni B*		**Continuous Pressure** *Pressione continua*		**Intermittent Pressure** *Pressione intermittente* (*)		**Peak pressure** *Picco pressione (*)*		**Noise level** *Livello rumore*	**Max torque** *Coppia max*
		L/min	**GPM**	**mm**	**inc**	**mm**	**inc**	**bar**	**PSI**	**bar**	**PSI**	**bar**	**PSI**	***dB***	***Nm***
4	4,2	6	1,585	101	3,976	44,5	1,752	275	3989	280	4061	300	4351	55	50
6	6,4	9,2	2,430	106,5	4,193	47,25	1,860	260	3771	275	3989	290	4206		
8	8,3	12	3,170	111,5	4,390	49,75	1,959	230	3336	210	3046	250	3626		
10	10,2	14,7	3,883	116,5	4,587	52,25	2,057	180	2611	190	2756	200	2901		
13	12,9	18,6	4,914	123,4	4,858	55,7	2,193	150	2176	160	2321	170	2466		

Max torque / *Coppia max:* 50 Nm
* Intermittent: cycle 20 sec. ON & 3 sec. OFF - Peak: cycle 1 sec. ON & 3 sec OFF. Intermittente: ciclo 20 sec. ON & 3 sec. OFF - Picco: ciclo 1 sec. ON & 3 sec OFF

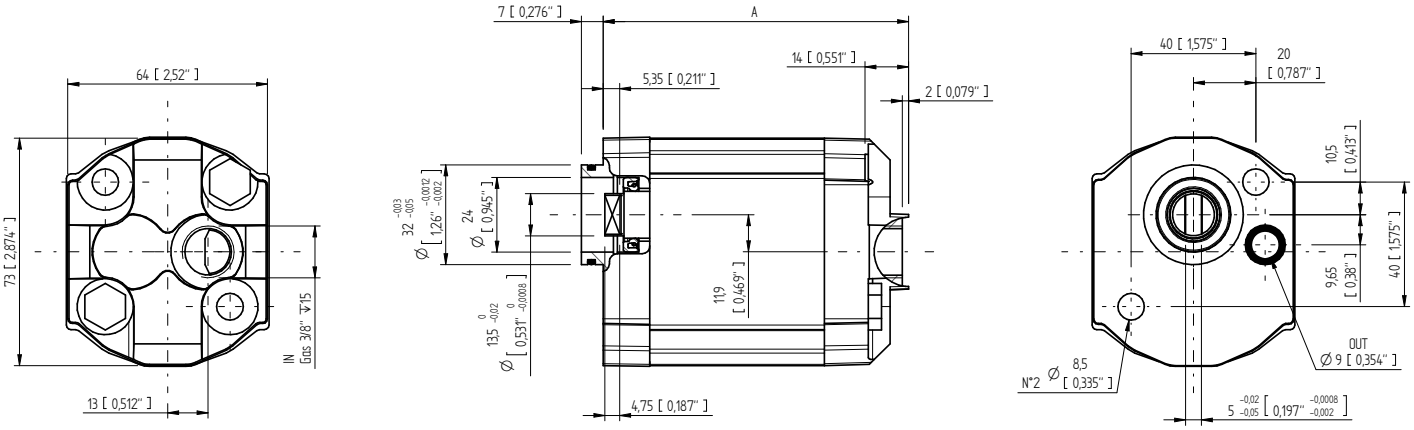

GR28 - TYPE / *TIPO* F1L AG54													
Type *Tipo*	**CC**	**Flow Portata**		**Dimensions A** *Dimensioni A*		**Continuous Pressure** *Pressione continua*		**Intermittent Pressure** *Pressione intermittente* (*)		**Peak pressure** *Picco pressione (*)*		**Noise level** *Livello rumore*	**Max torque** *Coppia max*
		L/min	**GPM**	**mm**	**inc**	**bar**	**PSI**	**bar**	**PSI**	**bar**	**PSI**	***dB***	***Nm***
4	4,2	6	1,585	101	3,976	275	3989	280	4061	300	4351	55	40
6	6,4	9,2	2,430	106,5	4,193	230	3336	240	3481	270	3916		
8	8,3	12	3,170	111,5	4,390	180	2611	200	2901	210	3046		
10	10,2	14,7	3,883	116,5	4,587	150	2176	160	2321	170	2466		
13	12,9	18,6	4,914	123,4	4,858	120	1740	130	1885	140	2031		

Max torque / *Coppia max: 40* Nm
* Intermittent: cycle 20 sec. ON & 3 sec. OFF - Peak: cycle 1 sec. ON & 3 sec OFF. Intermittente: ciclo 20 sec. ON & 3 sec. OFF - Picco: ciclo 1 sec. ON & 3 sec OFF

SETTIMA research & innovation, always

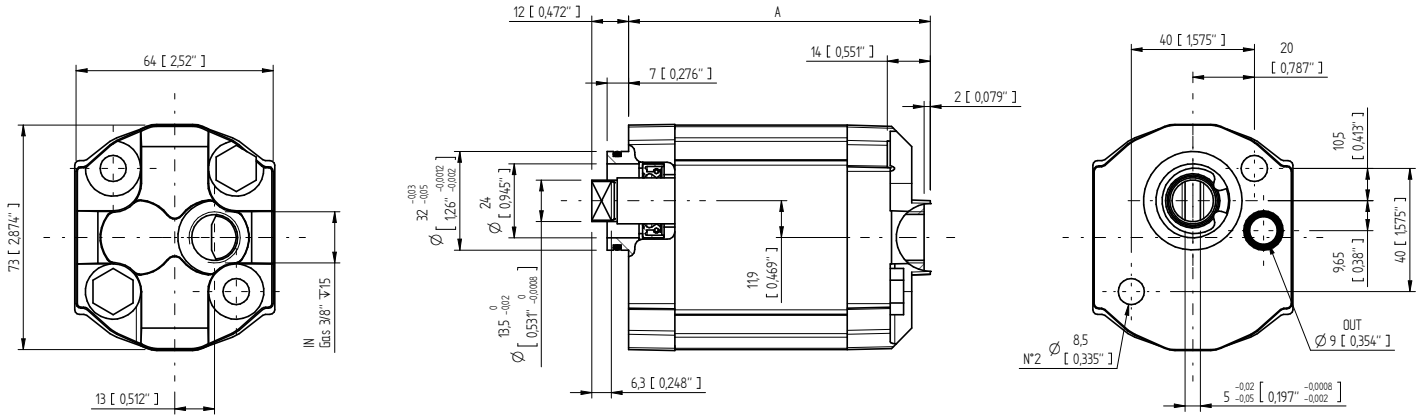

GR28 - TYPE / *TIPO* F1L AGL54													
Type *Tipo*	**CC**	**Flow** **Portata**		**Dimensions A** *Dimensioni A*		**Continuous Pressure** *Pressione continua*		**Intermittent Pressure** *Pressione intermittente* (*)		**Peak pressure** *Picco pressione (*)*		**Noise level** *Livello rumore*	**Max torque** *Coppia max*
		L/min	**GPM**	**mm**	**inc**	**bar**	**PSI**	**bar**	**PSI**	**bar**	**PSI**	***dB***	***Nm***
4	4,2	6	1,585	101	3,976	275	3989	280	4061	300	4351	55	50
6	6,4	9,2	2,430	106,5	4,193	260	3771	275	3989	290	4206		
8	8,3	12	3,170	111,5	4,390	230	3336	240	3481	250	3626		
10	10,2	14,7	3,883	116,5	4,587	180	2611	190	2756	200	2901		
13	12,9	18,6	4,914	123,4	4,858	150	2176	160	2321	170	2466		

Max torque / *Coppia max:* 50 Nm

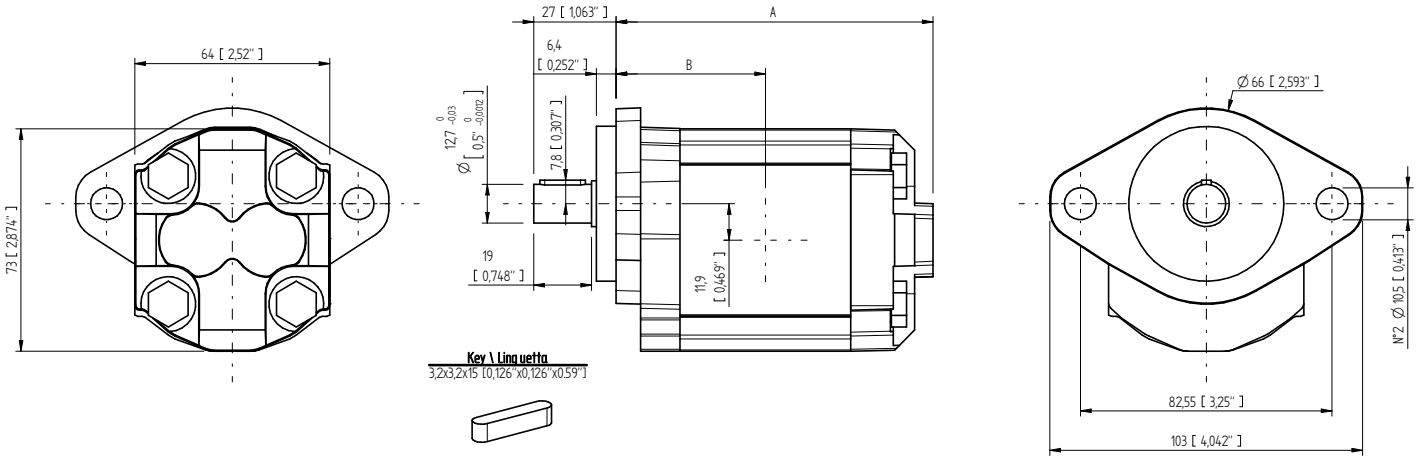

GR28 - TYPE / *TIPO* FSAEAA AC															
Type *Tipo*	**CC**	**Flow** **Portata**		**Dimensions A** *Dimensioni A*		**Dimensions B** *Dimensioni B*		**Continuous Pressure** *Pressione continua*		**Intermittent Pressure** *Pressione intermittente* (*)		**Peak pressure** *Picco pressione (*)*		**Noise level** *Livello rumore*	**Max torque** *Coppia max*
		L/min	**GPM**	**mm**	**inc**	**mm**	**inc**	**bar**	**PSI**	**bar**	**PSI**	**bar**	**PSI**	***dB***	***Nm***
4	4,2	6	1,585	107	4,213	50,50	1,988	234	3394	238	3452	255	3698	55	60
6	6,4	9,2	2,430	112,5	4,429	53,25	2,096	234	3394	238	3452	255	3698		
8	8,3	12	3,170	117,5	4,626	55,75	2,195	209	3031	221	3205	238	3452		
10	10,2	14,7	3,883	122,5	4,823	58,25	2,293	189	2741	213	3089	230	3336		
13	12,9	18,6	4,914	129,4	5,094	61,7	2,429	170	2466	196	2843	213	3089		

Max torque / *Coppia max:* 60 Nm

* Intermittent: cycle 20 sec. ON & 3 sec. OFF - Peak: cycle 1 sec. ON & 3 sec OFF. Intermittente: ciclo 20 sec. ON & 3 sec. OFF - Picco: ciclo 1 sec. ON & 3 sec OFF

INLET AND OUTLET PORTS / *PORTE DI ASPIRAZIONE E MANDATA* (Suction / Pressure)

Type G / *Tipo G*

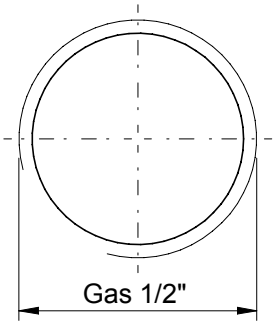

Type U / *Tipo U*

SAE O-Ring port 10

Thread ANSI B1.1 3/4-16 UNF-2B

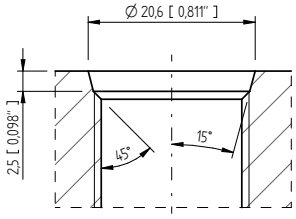

SAFETY VALVE / *VALVOLA DI MASSIMA*

Not available on models / *Non diponibile per i modelli* F1L AG54 and F1L AGL54

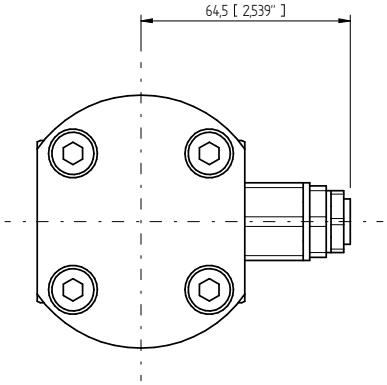

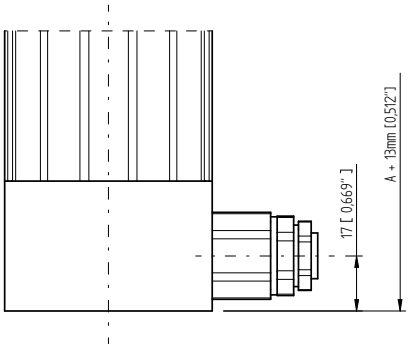

GR33 - Dimensional drawings / Disegni dimensionali

GR33 SHAFT AND FLANGE TYPES AND DIMENSIONS / *TIPI DI ALBERO E FLANGIA E DIMENSIONI*

Group 2 pumps / *Pompe gruppo 2*

Type	Class	Flange & Shaft available types	Ports	Weight
GR33	2C	F2 AC4	Q-G-U	5 Kg
		F2BK7 AG		
		FSAEA AC		
		FSAEA AT9		

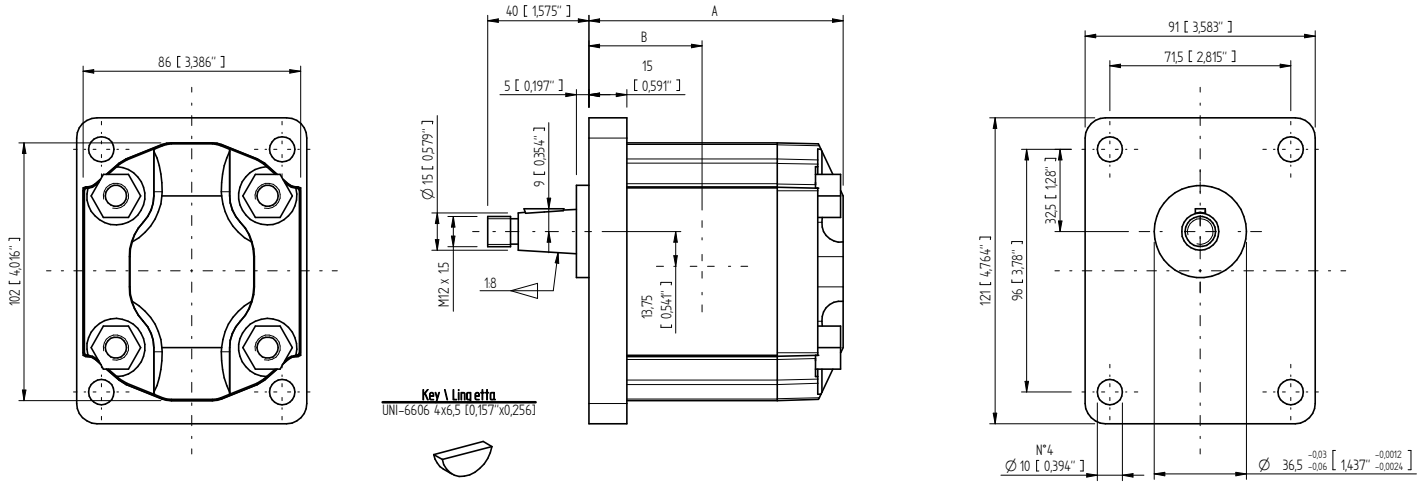

GR33 - TYPE / *TIPO* F2 AC4															
Type *Tipo*	CC	Flow Portata		Dimensions A *Dimensioni A*		Dimensions B *Dimensioni B*		Continuous Pressure *Pressione continua*		Intermittent Pressure *Pressione intermittente* (*)		Peak pressure *Picco pressione (*)*		Noise level *Livello rumore*	Max torque *Coppia max*
		L/min	GPM	mm	inc	mm	inc	bar	PSI	bar	PSI	bar	PSI	*dB*	*Nm*
10	10,1	14,5	3,830	104,5	4,114	46,75	1,841	275	3989	280	4061	300	4351	55	210
13	12,6	18,1	4,782	109,4	4,307	49,2	1,937	265	3844	270	3916	290	4206		
15	15,2	21,8	5,759	114,4	4,504	51,7	2,035	241	3495	250	3626	270	3916		
18	18,2	26,1	6,895	120,2	4,732	54,6	2,150	206	2988	250	3626	270	3916		

Max torque / *Coppia max:* 210 Nm

* Intermittent: cycle 20 sec. ON & 3 sec. OFF - Peak: cycle 1 sec. ON & 3 sec OFF. Intermittente: ciclo 20 sec. ON & 3 sec. OFF - Picco: ciclo 1 sec. ON & 3 sec OFF

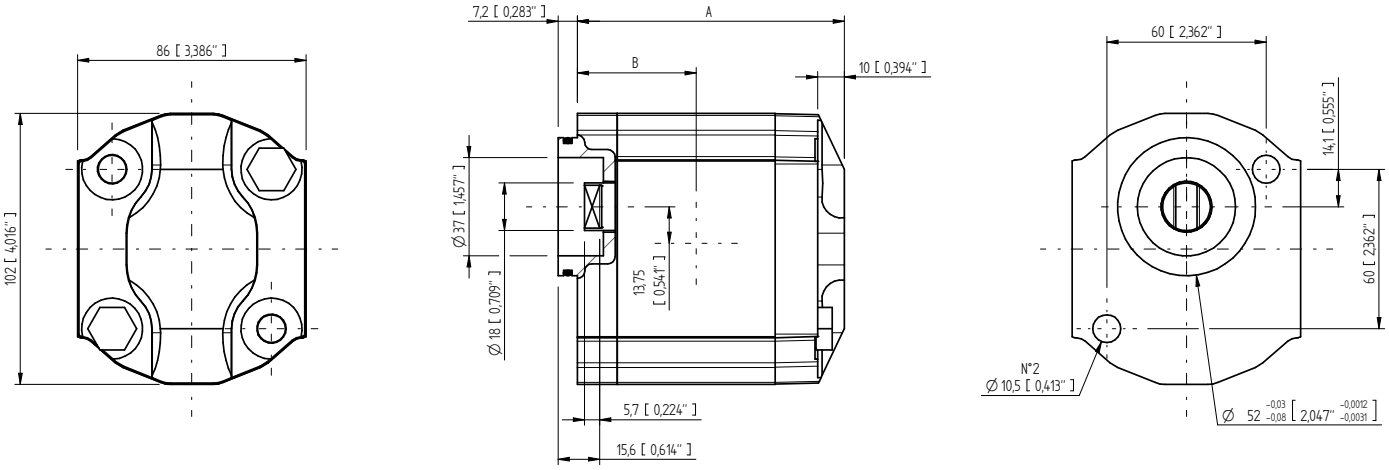

GR33 - TYPE / *TIPO* F2 BK7 AG															
Type ***Tipo***	**CC**	**Flow Portata**		**Dimensions A** ***Dimensioni A***		**Dimensions B** ***Dimensioni B***		**Continuous Pressure** ***Pressione continua***		**Intermittent Pressure** ***Pressione intermittente (*)***		**Peak pressure** ***Picco pressione (*)***		**Noise level** ***Livello rumore***	**Max torque** ***Coppia max***
		L/min	**GPM**	**mm**	**inc**	**mm**	**inc**	**bar**	**PSI**	**bar**	**PSI**	**bar**	**PSI**	***dB***	***Nm***
10	10,1	14,5	3,830	104,5	4,114	46,75	1,841	275	3989	280	4061	300	4351	55	110
13	12,6	18,1	4,782	109,4	4,307	49,2	1,937	265	3844	270	3916	290	4206		
15	15,2	21,8	5,759	114,4	4,504	51,7	2,035	241	3495	250	3626	270	3916		
18	18,2	26,1	6,895	120,2	4,732	54,6	2,150	206	2988	250	3626	270	3916		

Max torque / *Coppia max:* 110 Nm

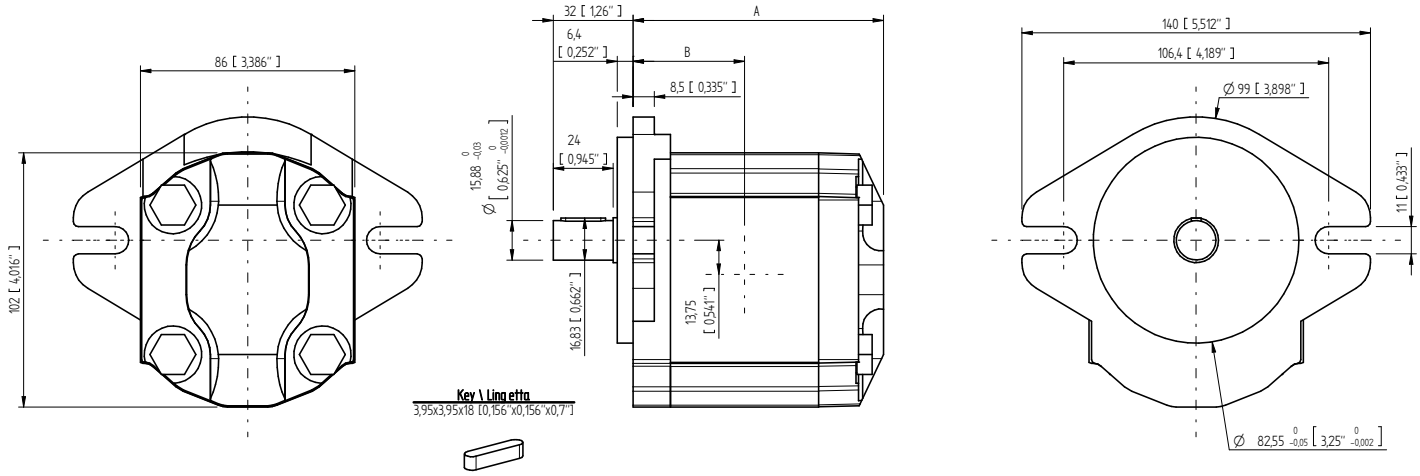

GR33 - TYPE / *TIPO* FSAEA AC															
Type ***Tipo***	**CC**	**Flow Portata**		**Dimensions A** ***Dimensioni A***		**Dimensions B** ***Dimensioni B***		**Continuous Pressure** ***Pressione continua***		**Intermittent Pressure** ***Pressione intermittente (*)***		**Peak pressure** ***Picco pressione (*)***		**Noise level** ***Livello rumore***	**Max torque** ***Coppia max***
		L/min	**GPM**	**mm**	**inc**	**mm**	**inc**	**bar**	**PSI**	**bar**	**PSI**	**bar**	**PSI**	***dB***	***Nm***
10	10,1	14,5	3,830	104,5	4,114	46,75	1,841	275	3989	280	4061	300	4351	55	140
13	12,6	18,1	4,782	109,4	4,307	49,2	1,937	265	3844	270	3916	290	4206		
15	15,2	21,8	5,759	114,4	4,504	51,7	2,035	241	3495	250	3626	270	3916		
18	18,2	26,1	6,895	120,2	4,732	54,6	2,150	206	2988	250	3626	270	3916		

Max torque / *Coppia max:* 140 Nm
* Intermittent: cycle 20 sec. ON & 3 sec. OFF - Peak: cycle 1 sec. ON & 3 sec OFF. Intermittente: ciclo 20 sec. ON & 3 sec. OFF - Picco: ciclo 1 sec. ON & 3 sec OFF

SETTIMA®
research & innovation, always

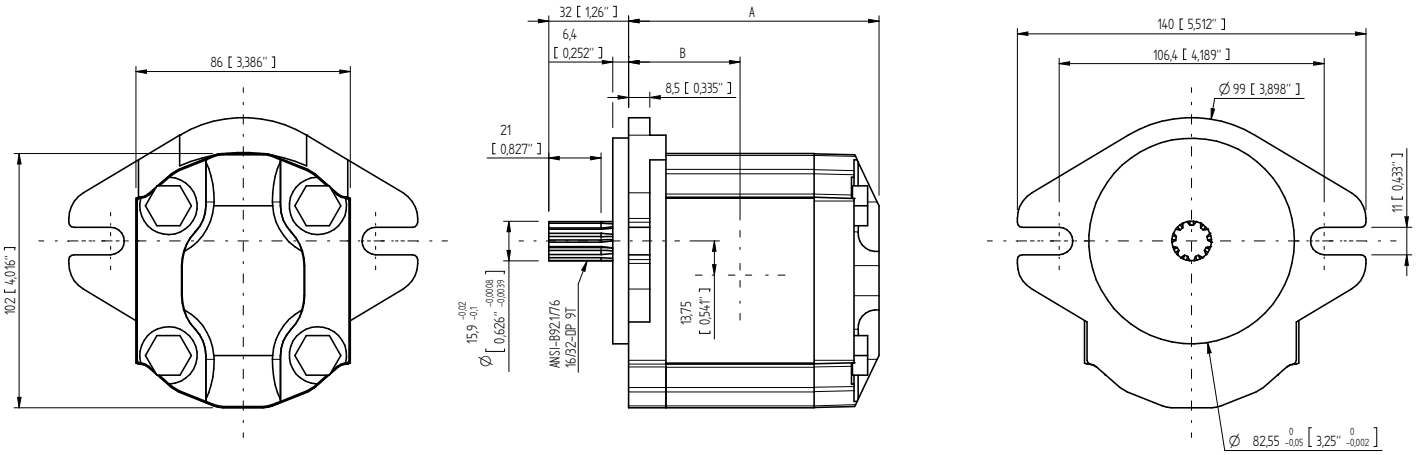

GR33 - TYPE / *TIPO* FSAEA ACT9															
Type ***Tipo***	**CC**	**Flow Portata**		**Dimensions A** ***Dimensioni A***		**Dimensions B** ***Dimensioni B***		**Continuous Pressure** ***Pressione continua***		**Intermittent Pressure** ***Pressione intermittente*** **(*)**		**Peak pressure** ***Picco pressione (*)***		**Noise level** ***Livello rumore***	**Max torque** ***Coppia max***
		L/min	**GPM**	**mm**	**inc**	**mm**	**inc**	**bar**	**PSI**	**bar**	**PSI**	**bar**	**PSI**	***dB***	***Nm***
10	10,1	14,5	3,830	104,5	4,114	46,75	1,841	275	3989	280	4061	300	4351	55	190
13	12,6	18,1	4,782	109,4	4,307	49,2	1,937	265	3844	270	3916	290	4206		
15	15,2	21,8	5,759	114,4	4,504	51,7	2,035	241	3495	250	3626	270	3916		
18	18,2	26,1	6,895	120,2	4,732	54,6	2,150	206	2988	250	3626	270	3916		

Max torque / *Coppia max:* 190 Nm
* Intermittent: cycle 20 sec. ON & 3 sec. OFF - Peak: cycle 1 sec. ON & 3 sec OFF. Intermittente: ciclo 20 sec. ON & 3 sec. OFF - Picco: ciclo 1 sec. ON & 3 sec OFF

INLET OUTLET PORTS / *PORTE DI ASPIRAZIONE E MANDATA* (Suction / Pressure)

Type G / *Tipo G*

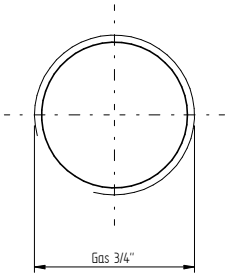

Type Q / *Tipo Q*

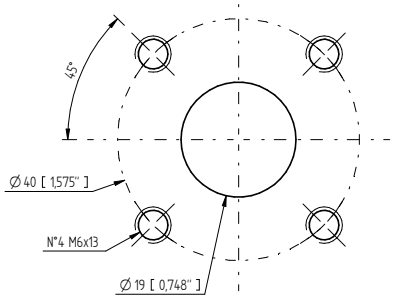

UNF INLET OUTLET PORTS / *PORTE DI ASPIRAZIONE E MANDATA UNF* - **Type U / *Tipo U***

SAE O-Ring ANSI B1.1
port 10

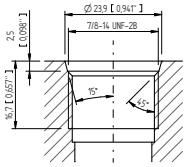

SAE O-Ring ANSI B1.1
port 12

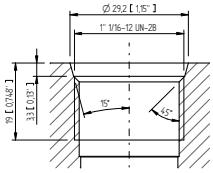

SAE O-Ring ANSI B1.1
port 16

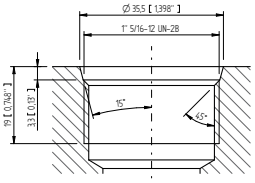

Suction/Pressure U ports possible configuration
Possibili combinazioni porte di aspirazione/ mandata di tipo U

Pump	Suction port	Pressure port
10 cc	SAE O-Ring port 12	SAE O-Ring port 10
13 cc	SAE O-Ring port 12	SAE O-Ring port 10
15 cc	SAE O-Ring port 12	SAE O-Ring port 10
18 cc	SAE O-Ring port 16	SAE O-Ring port 12

GR38 - Dimensional drawings / Disegni dimensionali

GR38 SHAFT AND FLANGE TYPES AND DIMENSIONS / *TIPI DI ALBERO E FLANGIA E DIMENSIONI*

Group 2 pumps / *Pompe gruppo 2*

Type	Class	Flange & Shaft available types	Ports	Weight
GR38	2C	F2 AC4	Q-G-U	6 Kg
		F2BK7 AG		
		FSAEA AC		
		FSAEA AT9		
		FSAEA AT11		

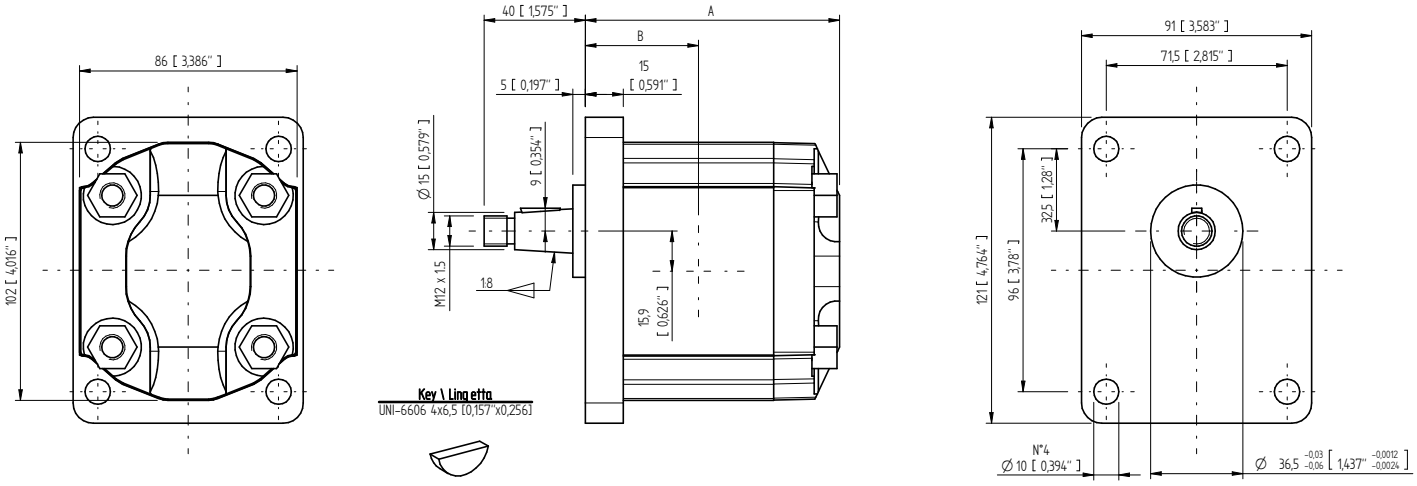

GR38 - TYPE / *TIPO* F2 AC4															
Type *Tipo*	CC	Flow Portata		Dimensions A *Dimensioni A*		Dimensions B *Dimensioni B*		Continuous Pressure *Pressione continua*		Intermittent Pressure *Pressione intermittente* (*)		Peak pressure *Picco pressione (*)*		Noise level *Livello rumore*	Max torque *Coppia max*
		L/min	GPM	mm	inc	mm	inc	bar	PSI	bar	PSI	bar	PSI	*dB*	*Nm*
16	15,9	22,8	6,023	108	4,252	48,5	1,909	265	3844	280	4061	300	4351	55	210
18	17,9	25,8	6,816	111	4,370	50	1,969	247	3582	260	3771	280	4061		
20	20	28,8	7,608	114	4,488	51,5	2,028	230	3336	250	3626	270	3916		
22	22,1	31,8	8,401	117	4,606	53	2,087	222	3220	240	3481	260	3771		
25	25,2	36,2	9,563	121,5	4,783	55,25	2,175	200	2901	210	3046	220	3191		
28	28,3	40,7	10,752	126	4,961	57,5	2,264	180	2611	190	2756	200	2901		

Max torque / *Coppia max:* 210 Nm
* Intermittent: cycle 20 sec. ON & 3 sec. OFF - Peak: cycle 1 sec. ON & 3 sec OFF. Intermittente: ciclo 20 sec. ON & 3 sec. OFF - Picco: ciclo 1 sec. ON & 3 sec OFF

SETTIMA research & innovation, always

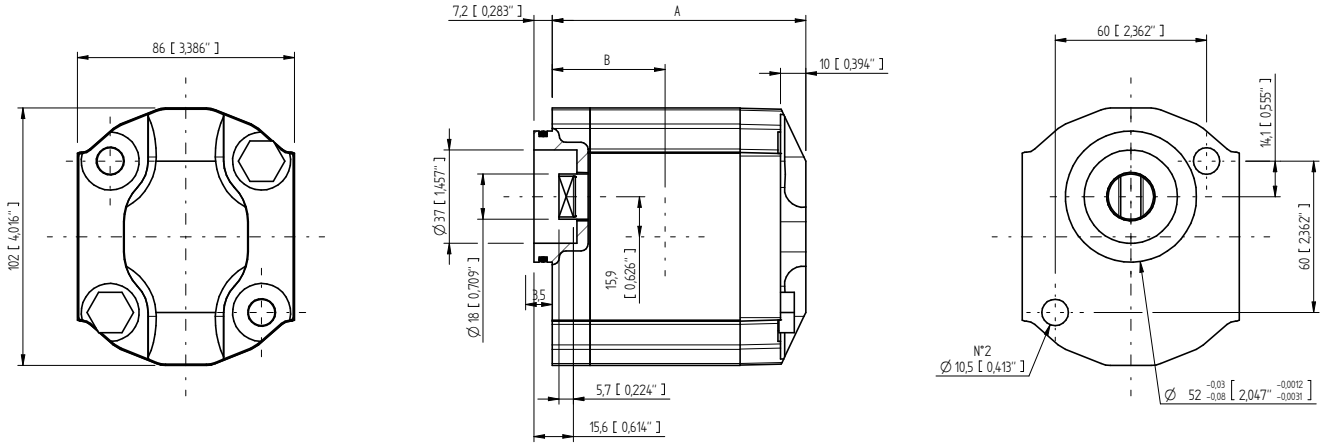

GR38 - TYPE / *TIPO* F2BK7 AG															
Type ***Tipo***	**CC**	**Flow Portata**		**Dimensions A** ***Dimensioni A***		**Dimensions B** ***Dimensioni B***		**Continuous Pressure** ***Pressione continua***		**Intermittent Pressure** ***Pressione intermittente*** **(*)**		**Peak pressure** ***Picco pressione (*)***		**Noise level** ***Livello rumore***	**Max torque** ***Coppia max***
		L/min	**GPM**	**mm**	**inc**	**mm**	**inc**	**bar**	**PSI**	**bar**	**PSI**	**bar**	**PSI**	***dB***	***Nm***
16	15,9	22,8	6,023	108	4,252	48,5	1,909	265	3844	280	4061	300	4351	55	110
18	17,9	25,8	6,816	111	4,370	50	1,969	247	3582	260	3771	280	4061		
20	20	28,8	7,608	114	4,488	51,5	2,028	230	3336	250	3626	260	3771		
22	22,1	31,8	8,401	117	4,606	53	2,087	210	3046	230	3336	240	3481		
25	25,2	36,2	9,563	121,5	4,783	55,25	2,175	200	2901	210	3046	220	3191		
28	28,3	40,7	10,752	126	4,961	57,5	2,264	180	2611	190	2756	200	2901		

Max torque / *Coppia max:* 110 Nm

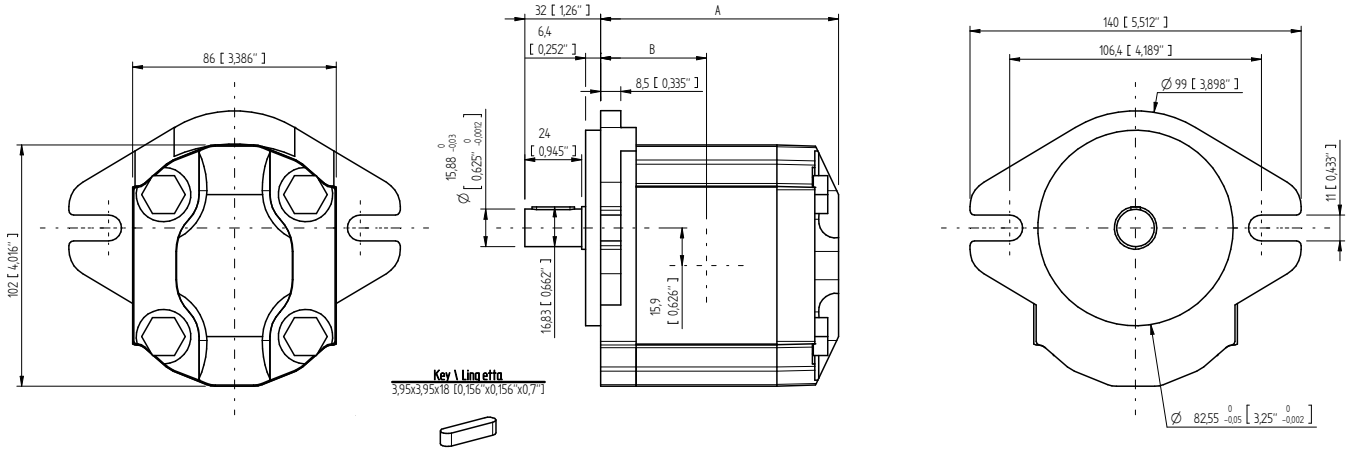

GR38 - TYPE / *TIPO* FSAEA AC															
Type ***Tipo***	**CC**	**Flow Portata**		**Dimensions A** ***Dimensioni A***		**Dimensions B** ***Dimensioni B***		**Continuous Pressure** ***Pressione continua***		**Intermittent Pressure** ***Pressione intermittente*** **(*)**		**Peak pressure** ***Picco pressione (*)***		**Noise level** ***Livello rumore***	**Max torque** ***Coppia max***
		L/min	**GPM**	**mm**	**inc**	**mm**	**inc**	**bar**	**PSI**	**bar**	**PSI**	**bar**	**PSI**	***dB***	***Nm***
16	15,9	22,8	6,023	108	4,252	48,5	1,909	265	3844	280	4061	300	4351	55	140
18	17,9	25,8	6,816	111	4,370	50	1,969	247	3582	260	3771	280	4061		
20	20	28,8	7,608	114	4,488	51,5	2,028	230	3336	250	3626	270	3916		
22	22,1	31,8	8,401	117	4,606	53	2,087	222	3220	240	3481	260	3771		
25	25,2	36,2	9,563	121,5	4,783	55,25	2,175	200	2901	210	3046	220	3191		
28	28,3	40,7	10,752	126	4,961	57,5	2,264	180	2611	190	2756	200	2901		

Max torque / *Coppia max:* 140 Nm

* Intermittent: cycle 20 sec. ON & 3 sec. OFF - Peak: cycle 1 sec. ON & 3 sec OFF. Intermittente: ciclo 20 sec. ON & 3 sec. OFF - Picco: ciclo 1 sec. ON & 3 sec OFF

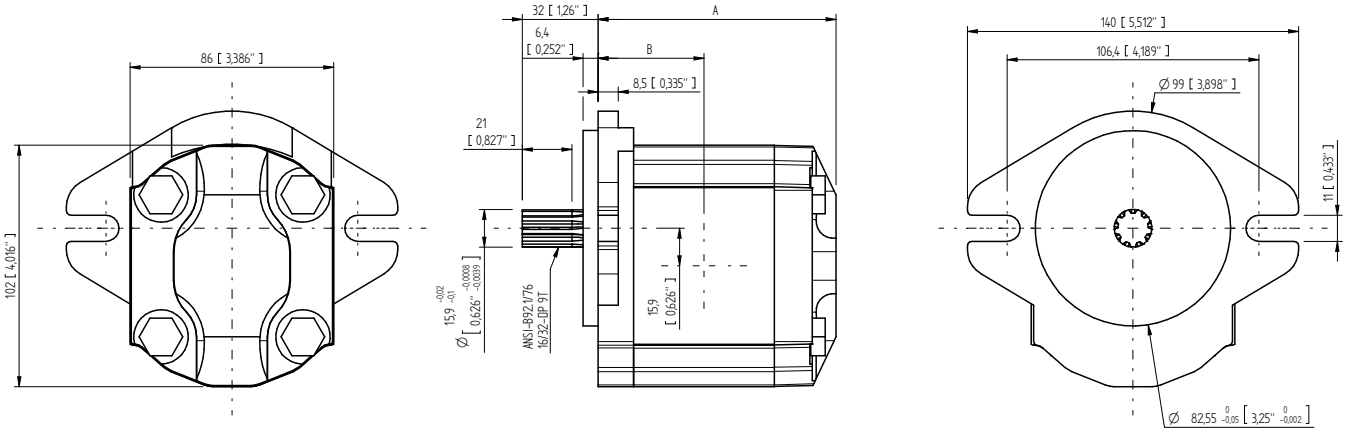

GR38 - TYPE / *TIPO* FSAEA AT9															
Type *Tipo*	**CC**	**Flow** **Portata**		**Dimensions A** *Dimensioni A*		**Dimensions B** *Dimensioni B*		**Continuous Pressure** *Pressione continua*		**Intermittent Pressure** *Pressione intermittente* (*)		**Peak pressure** *Picco pressione (*)*		**Noise level** *Livello rumore*	**Max torque** *Coppia max*
		L/min	**GPM**	**mm**	**inc**	**mm**	**inc**	**bar**	**PSI**	**bar**	**PSI**	**bar**	**PSI**	***dB***	***Nm***
16	15,9	22,8	6,023	108	4,252	48,5	1,909	265	3844	280	4061	300	4351	55	190
18	17,9	25,8	6,816	111	4,370	50	1,969	247	3582	260	3771	280	4061		
20	20	28,8	7,608	114	4,488	51,5	2,028	230	3336	250	3626	270	3916		
22	22,1	31,8	8,401	117	4,606	53	2,087	222	3220	240	3481	260	3771		
25	25,2	36,2	9,563	121,5	4,783	55,25	2,175	200	2901	210	3046	220	3191		
28	28,3	40,7	10,752	126	4,961	57,5	2,264	180	2611	190	2756	200	2901		

Max torque / *Coppia max:* 190 Nm
* Intermittent: cycle 20 sec. ON & 3 sec. OFF - Peak: cycle 1 sec. ON & 3 sec OFF. Intermittente: ciclo 20 sec. ON & 3 sec. OFF - Picco: ciclo 1 sec. ON & 3 sec OFF

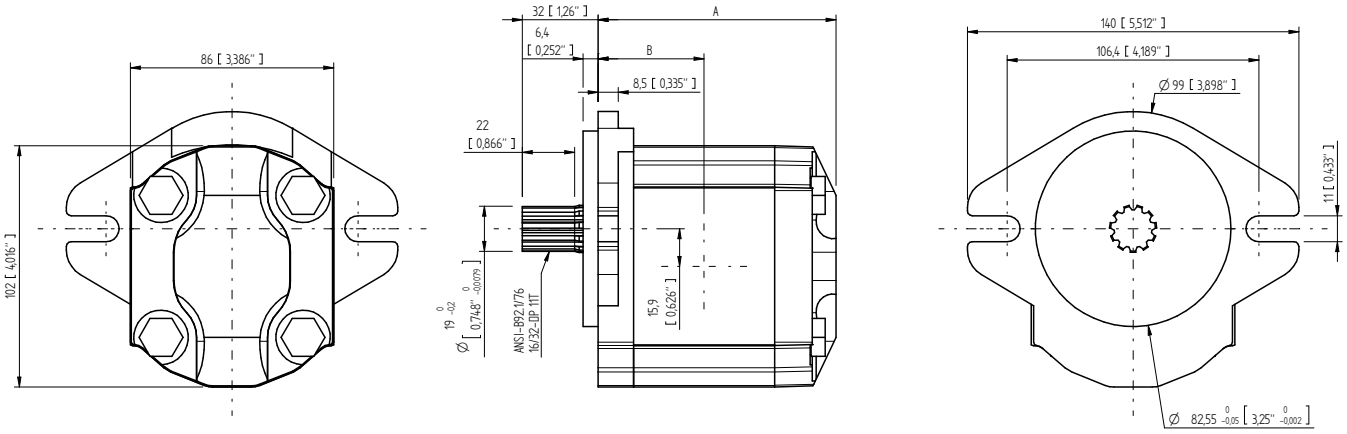

GR38 - TYPE / *TIPO* FSAEA AT11															
Type *Tipo*	**CC**	**Flow** **Portata**		**Dimensions A** *Dimensioni A*		**Dimensions B** *Dimensioni B*		**Continuous Pressure** *Pressione continua*		**Intermittent Pressure** *Pressione intermittente* (*)		**Peak pressure** *Picco pressione (*)*		**Noise level** *Livello rumore*	**Max torque** *Coppia max*
		L/min	**GPM**	**mm**	**inc**	**mm**	**inc**	**bar**	**PSI**	**bar**	**PSI**	**bar**	**PSI**	***dB***	***Nm***
16	15,9	22,8	6,023	108	4,252	48,5	1,909	265	3844	280	4061	300	4351	55	210
18	17,9	25,8	6,816	111	4,370	50	1,969	247	3582	260	3771	280	4061		
20	20	28,8	7,608	114	4,488	51,5	2,028	230	3336	250	3626	270	3916		
22	22,1	31,8	8,401	117	4,606	53	2,087	222	3220	250	3626	270	3916		
25	25,2	36,2	9,563	121,5	4,783	55,25	2,175	200	2901	250	3626	270	3916		
28	28,3	40,7	10,752	126	4,961	57,5	2,264	197	2857	250	3626	270	3916		

Max torque / *Coppia max:* 210 Nm
* Intermittent: cycle 20 sec. ON & 3 sec. OFF - Peak: cycle 1 sec. ON & 3 sec OFF. Intermittente: ciclo 20 sec. ON & 3 sec. OFF - Picco: ciclo 1 sec. ON & 3 sec OFF

SETTIMA®
research & innovation, always

INLET OUTLET PORTS / *PORTE DI ASPIRAZIONE E MANDATA* (Suction / Pressure)

Type G / *Tipo G*

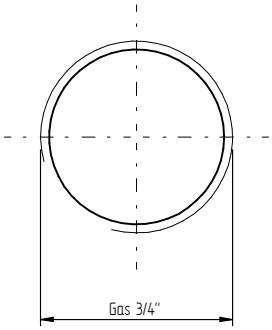

Type Q / *Tipo Q*

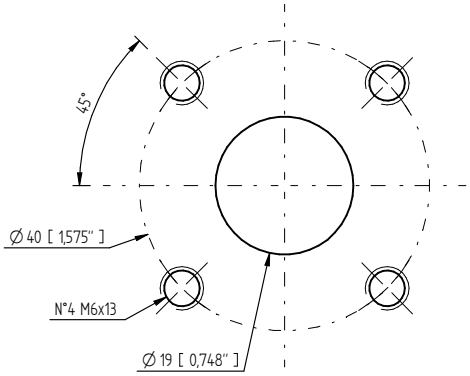

UNF INLET OUTLET PORTS / *PORTE DI ASPIRAZIONE E MANDATA UNF* **- Type U / *Tipo U***

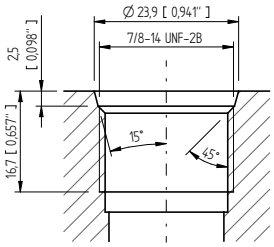

SAE O-Ring ANSI B1.1
port 10

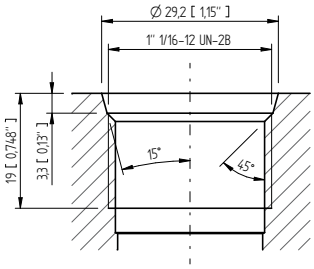

SAE O-Ring ANSI B1.1
port 12

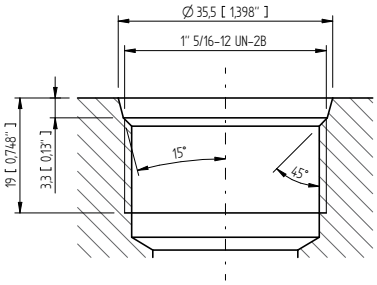

SAE O-Ring ANSI B1.1
port 16

Suction/Pressure UNF ports possible configuration
Possibili combinazioni porte di aspirazione/mandata di tipo UNF

Pump	Suction port	Pressure port
16 cc	SAE O-Ring port 12	SAE O-Ring port 10
18 cc	SAE O-Ring port 16	SAE O-Ring port 12
20 cc	SAE O-Ring port 16	SAE O-Ring port 12
22 cc	SAE O-Ring port 16	SAE O-Ring port 12
25 cc	SAE O-Ring port 16	SAE O-Ring port 12
28 cc	SAE O-Ring port 16	SAE O-Ring port 12

GR47 - Dimensional drawings / Disegni dimensionali

GR47 SHAFT AND FLANGE TYPES AND DIMENSIONS / *TIPI DI ALBERO E FLANGIA E DIMENSIONI*

Group 3 pumps / *Pompe gruppo 3*

Type	Class	Flange & Shaft available types	Ports	Weight
GR47	2C	F3 AC9	G-O-U	10 Kg
		FSAEB AC		
		FSAEB AT13		

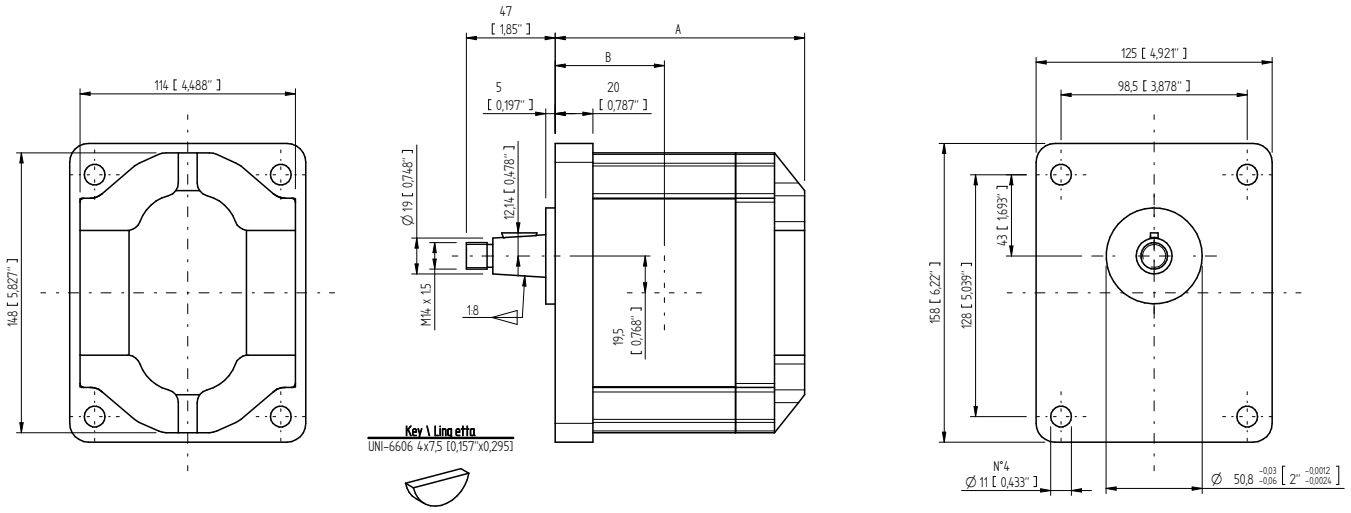

GR47 - TYPE / *TIPO* F3 AC9															
Type *Tipo*	CC	Flow Portata		Dimensions A *Dimensioni A*		Dimensions B *Dimensioni B*		Continuous Pressure *Pressione continua*		Intermittent Pressure *Pressione intermittente* (*)		Peak pressure *Picco pressione (*)*		Noise level *Livello rumore*	Max torque *Coppia max*
		L/min	GPM	mm	inc	mm	inc	bar	PSI	bar	PSI	bar	PSI	*dB*	*Nm*
28	28	40,3	10,646	139,5	5,492	61,5	2,421	270	3916	280	4061	300	4351	57	320
32	32,2	46,3	12,231	143,5	5,65	63,5	2,5	252	3655	270	3916	280	4061		
36	36,3	52,3	13,816	147,5	5,807	65,5	2,579	239	3466	250	3626	270	3916		
40	40,5	58,3	15,401	151,5	5,965	67,5	2,657	225	3263	250	3626	270	3916		
45	45,5	65	17,171	156	6,142	69,75	2,746	213	3089	250	3626	270	3916		
50	50,3	72,4	19,126	161	6,339	72,25	2,844	202	2930	250	3626	270	3916		

Max torque / *Coppia max:* 320 Nm

* Intermittent: cycle 20 sec. ON & 3 sec. OFF - Peak: cycle 1 sec. ON & 3 sec OFF. Intermittente: ciclo 20 sec. ON & 3 sec. OFF - Picco: ciclo 1 sec. ON & 3 sec OFF

SETTIMA research & innovation, always

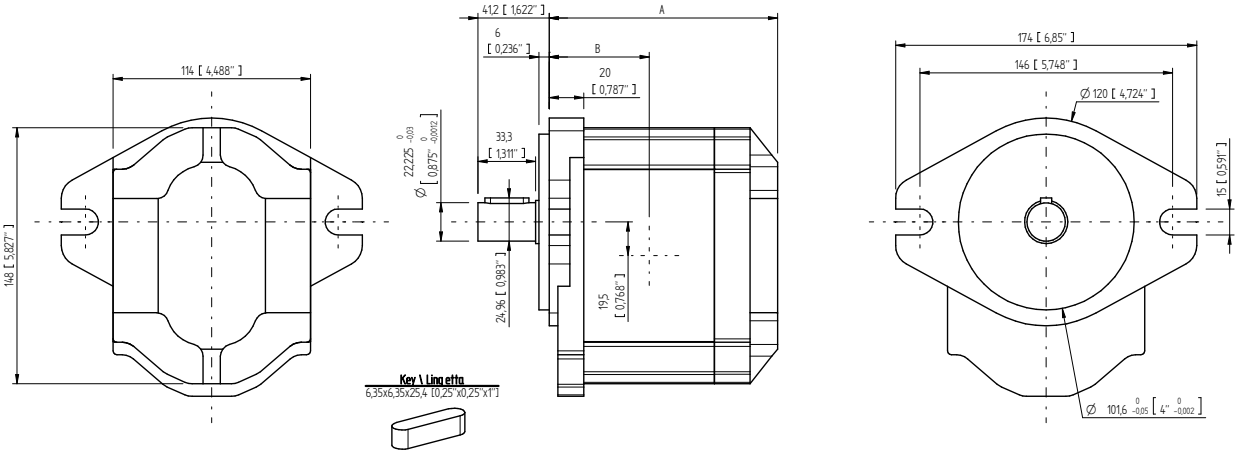

GR47 - TYPE / *TIPO* FSAEB AC															
Type ***Tipo***	**CC**	**Flow Portata**		**Dimensions A** ***Dimensioni A***		**Dimensions B** ***Dimensioni B***		**Continuous Pressure** ***Pressione continua***		**Intermittent Pressure** ***Pressione intermittente (*)***		**Peak pressure** ***Picco pressione (*)***		**Noise level** ***Livello rumore***	**Max torque** ***Coppia max***
		L/min	**GPM**	**mm**	**inc**	**mm**	**inc**	**bar**	**PSI**	**bar**	**PSI**	**bar**	**PSI**	***dB***	***Nm***
28	28	40,3	10,646	139,5	5,492	61,5	2,421	270	3916	280	4061	300	4351	57	450
32	32,2	46,3	12,231	143,5	5,65	63,5	2,5	252	3655	270	3916	280	4061		
36	36,3	52,3	13,816	147,5	5,807	65,5	2,579	239	3466	250	3626	270	3916		
40	40,5	58,3	15,401	151,5	5,965	67,5	2,657	225	3263	250	3626	270	3916		
45	45,5	65	17,171	156	6,142	69,75	2,746	213	3089	250	3626	270	3916		
50	50,3	72,4	19,126	161	6,339	72,25	2,844	202	2930	250	3626	270	3916		

Max torque / *Coppia max:* 450 Nm - Max torque / *Coppia max:* 600 Nm
* Intermittent: cycle 20 sec. ON & 3 sec. OFF - Peak: cycle 1 sec. ON & 3 sec OFF. Intermittente: ciclo 20 sec. ON & 3 sec. OFF - Picco: ciclo 1 sec. ON & 3 sec OFF

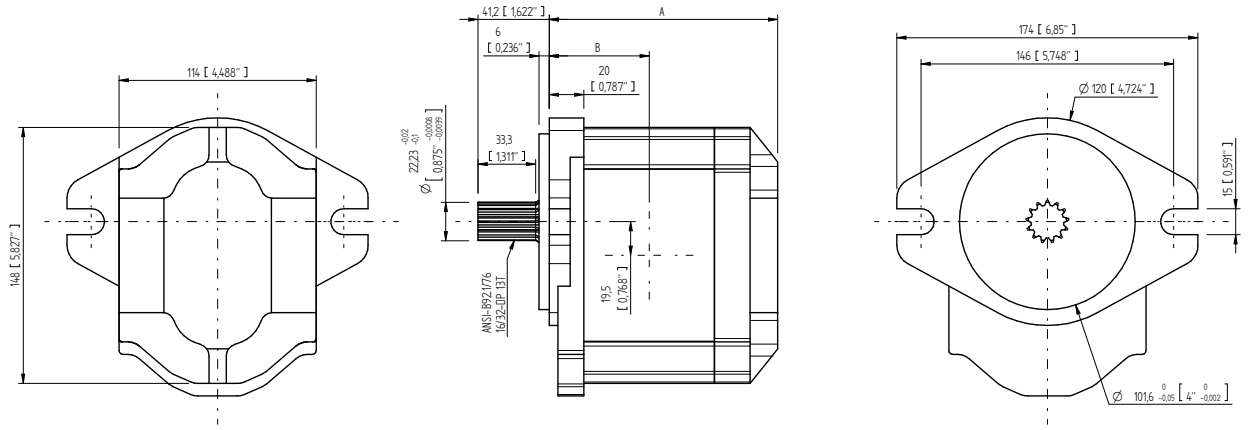

GR47 - TYPE / *TIPO* FSAEB AT13															
Type ***Tipo***	**CC**	**Flow Portata**		**Dimensions A** ***Dimensioni A***		**Dimensions B** ***Dimensioni B***		**Continuous Pressure** ***Pressione continua***		**Intermittent Pressure** ***Pressione intermittente (*)***		**Peak pressure** ***Picco pressione (*)***		**Noise level** ***Livello rumore***	**Max torque** ***Coppia max***
		L/min	**GPM**	**mm**	**inc**	**mm**	**inc**	**bar**	**PSI**	**bar**	**PSI**	**bar**	**PSI**	***dB***	***Nm***
28	28	40,3	10,646	139,5	5,492	61,5	2,421	270	3916	280	4061	300	4351	57	600
32	32,2	46,3	12,231	143,5	5,65	63,5	2,5	252	3655	270	3916	280	4061		
36	36,3	52,3	13,816	147,5	5,807	65,5	2,579	239	3466	250	3626	270	3916		
40	40,5	58,3	15,401	151,5	5,965	67,5	2,657	225	3263	250	3626	270	3916		
45	45,5	65	17,171	156	6,142	69,75	2,746	213	3089	250	3626	270	3916		
50	50,3	72,4	19,126	161	6,339	72,25	2,844	202	2930	250	3626	270	3916		

Max torque / *Coppia max:* 450 Nm - Max torque / *Coppia max:* 600 Nm
* Intermittent: cycle 20 sec. ON & 3 sec. OFF - Peak: cycle 1 sec. ON & 3 sec OFF. Intermittente: ciclo 20 sec. ON & 3 sec. OFF - Picco: ciclo 1 sec. ON & 3 sec OFF

Suction port
Type "U"

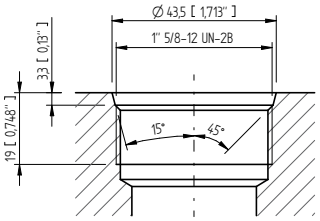

Pressure port
Type "U"

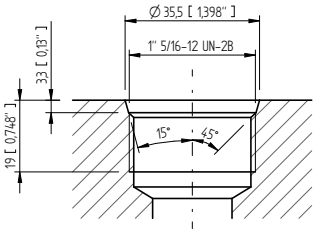

Suction port
Type "G"

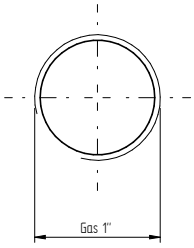

Pressure port
Type "G"

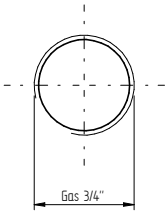

Suction port
Type "O"

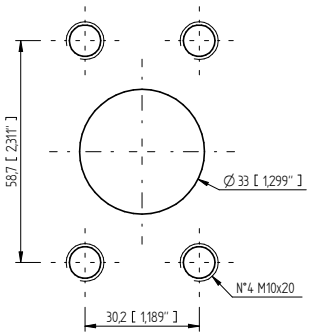

Pressure port
Type "O"

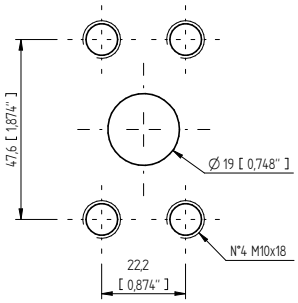

GR55 - Dimensional drawings / Disegni dimensionali

GR55 SHAFT AND FLANGE TYPES AND DIMENSIONS / *TIPI DI ALBERO E FLANGIA E DIMENSIONI*

Group 3 pumps / *Pompe gruppo 3*

Type	Class	Flange & Shaft available types	Ports	Weight
GR55	2C	FSAEB AC	O-OE	15 Kg
		FSAEB AT15		

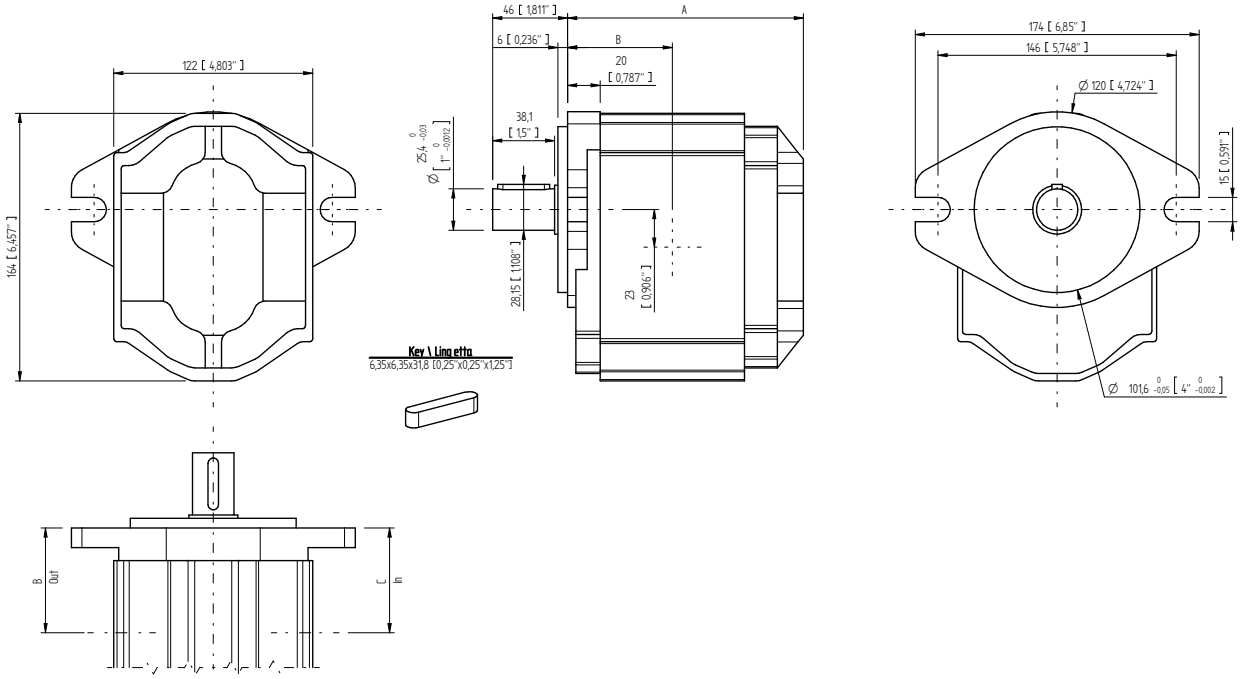

GR55 - TYPE / *TIPO* FSAEB AC																			
Type *Tipo*	CC	Flow Portata		Dimensions A *Dimensioni A*		Dimensions B *Dimensioni B*		Dimensions C *Dimensioni C*				Continuous Pressure *Pressione continua*		Intermittent Pressure *Pressione intermittente* (*)		Peak pressure *Picco pressione (*)*		Noise level *Livello rumore*	Max torque *Coppia max*
		L/min	GPM	mm	inc	mm	inc	O		OE		bar	PSI	bar	PSI	bar	PSI	dB	Nm
								mm	inc	mm	inc								
50	50,5	72,7	19,205	157	6,181	70,5	2,776	70,5	2,776	70,5	2,776	275	3989	280	4061	300	4351	57	550
63	63,5	91,4	24,145	166	6,535	75	2,953	75	2,953	78,5	3,091	249	3611	260	3771	280	4061		
75	75	108,1	28,557	174	6,85	79	3,11	79	3,11	82,50	3,248	229	3321	250	3626	270	3916		
90	90,2	130,9	34,580	185	7,283	84,5	3,327	84,5	3,327	88	3,465	178	2582	240	3481	260	3771		

Max torque / *Coppia max:* 700 Nm

* Intermittent: cycle 20 sec. ON & 3 sec. OFF - Peak: cycle 1 sec. ON & 3 sec OFF. Intermittente: ciclo 20 sec. ON & 3 sec. OFF - Picco: ciclo 1 sec. ON & 3 sec OFF

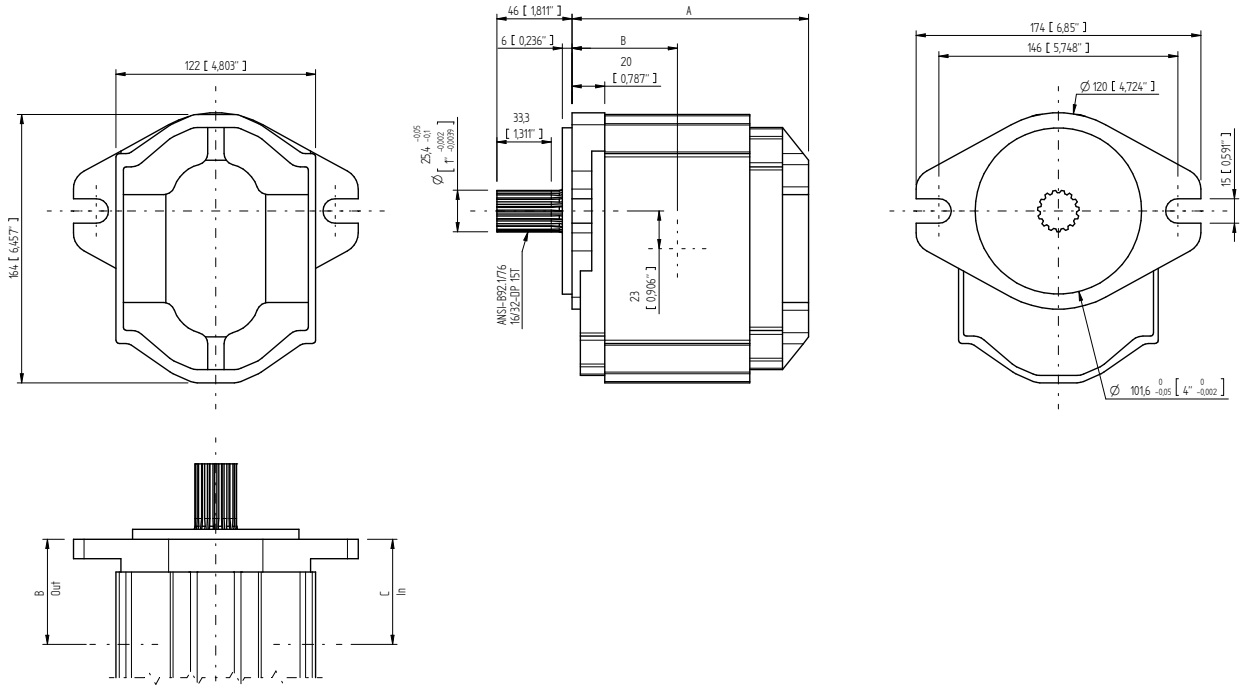

GR55 - TYPE / *TIPO* FSAEB AT15																			
Type *Tipo*	**CC**	**Flow Portata**		**Dimensions A** *Dimensioni A*		**Dimensions B** *Dimensioni B*		**Dimensions C** *Dimensioni C*				**Continuous Pressure** *Pressione continua*		**Intermittent Pressure** *Pressione intermittente* (*)		**Peak pressure** *Picco pressione (*)*		**Noise level** *Livello rumore*	**Max torque** *Coppia max*
								O		**OE**									
		L/ min	**GPM**	**mm**	**inc**	**mm**	**inc**	**mm**	**inc**	**mm**	**inc**	**bar**	**PSI**	**bar**	**PSI**	**bar**	**PSI**	***dB***	***Nm***
50	50,5	72,7	19,205	157	6,181	70,5	2,776	70,5	2,776	70,5	2,776	275	3989	280	4061	300	4351	57	700
63	63,5	91,4	24,145	166	6,535	75	2,953	75	2,953	78,5	3,091	249	3611	260	3771	280	4061		
75	75	108,1	28,557	174	6,85	79	3,11	79	3,11	82,50	3,248	229	3321	250	3626	270	3916		
90	90,2	130,9	34,580	185	7,283	84,5	3,327	84,5	3,327	88	3,465	178	2582	240	3481	260	3771		

Max torque / *Coppia max:* 550 Nm
* Intermittent: cycle 20 sec. ON & 3 sec. OFF - Peak: cycle 1 sec. ON & 3 sec OFF. Intermittente: ciclo 20 sec. ON & 3 sec. OFF - Picco: ciclo 1 sec. ON & 3 sec OFF

GR55 INLET OUTLET PORTS / *PORTE DI ASPIRAZIONE E MANDATA* - **Type / *Tipo O - OE***

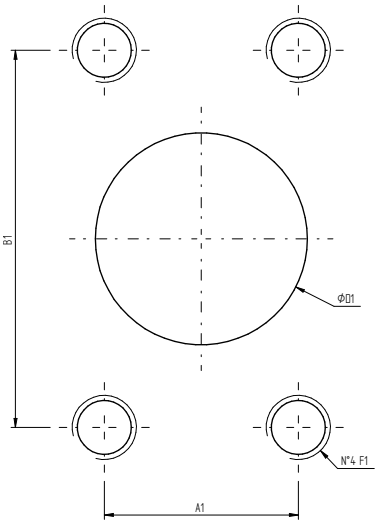

INLET			
Type port	**"O"**	**"OE"**	
Size port	**SAE-3000 1" ¼**	**SAE-3000 1" ¼** only for 50cc	**SAE-3000 1" ½**
A1	30,20	30,20	35,70
B1	58,70	58,70	69,85
ØD1	33,00	33,00	38,00
F1	M10x20	M10x18	M12x18

OUTLET		
Type port	**"O"**	**"OE"**
Size port	**SAE-3000 ¾"**	**SAE-3000 1"**
A2	22,20	26,20
B2	47,60	52,40
ØD2	19,00	25,00
F2	M10X18	M10X18

SETTIMA research & innovation, always

GR72 - Dimensional drawings / Disegni dimensionali

GR72 SHAFT AND FLANGE TYPES AND DIMENSIONS / *TIPI DI ALBERO E FLANGIA E DIMENSIONI*

Group 4 pumps / *Pompe gruppo 4*

Type	Class	Flange & Shaft available types	Ports	Weight
GR72	2V	FSAED AC FSAED AT23	ME	30 Kg

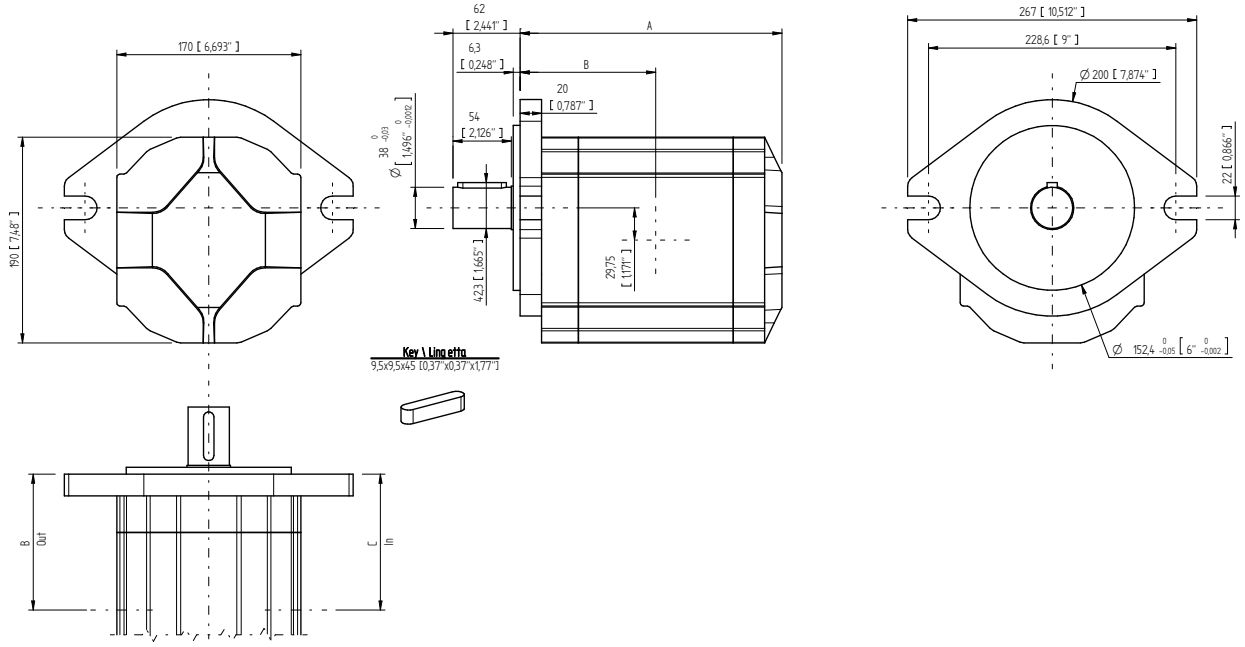

GR72 - TYPE / *TIPO* FSAED AC																	
Type *Tipo*	CC	Flow Portata		Dimensions A *Dimensioni A*		Dimensions B *Dimensioni B*		Dimensions C *Dimensioni C*		Continuous Pressure *Pressione continua*		Intermittent Pressure *Pressione intermittente* (*)		Peak pressure *Picco pressione* (*)		Noise level *Livello rumore*	Max torque *Coppia max*
		L/min	GPM	mm	inc	mm	inc	mm	inc	bar	PSI	bar	PSI	bar	PSI	*dB*	*Nm*
94	94,1	136	35,927	245	9,646	125,5	4,941	128,5	4,941	240	3481	250	3626	260	3771	57	1000
101	101,4	147	38,833	248	9,764	127	5	134	5,276	230	3336	240	3481	250	3626		
125	125,5	181	47,815	258	10,157	132	5,197	145	5,709	220	3191	220	3191	230	3336		
150	150,9	218	57,589	268,5	10,571	137,25	5,404	150,25	5,915	200	2901	210	3046	220	3191		
175	175	253	66,836	278,5	10,965	142,25	5,6	155,25	6,112	180	2611	190	2756	200	2901		
200	200,4	290	76,610	289	11,378	147,5	5,807	160,5	6,319	160	2321	170	2466	180	2611		

Max torque / *Coppia max:* 1000 Nm
* Intermittent: cycle 20 sec. ON & 3 sec. OFF - Peak: cycle 1 sec. ON & 3 sec OFF. Intermittente: ciclo 20 sec. ON & 3 sec. OFF - Picco: ciclo 1 sec. ON & 3 sec OFF

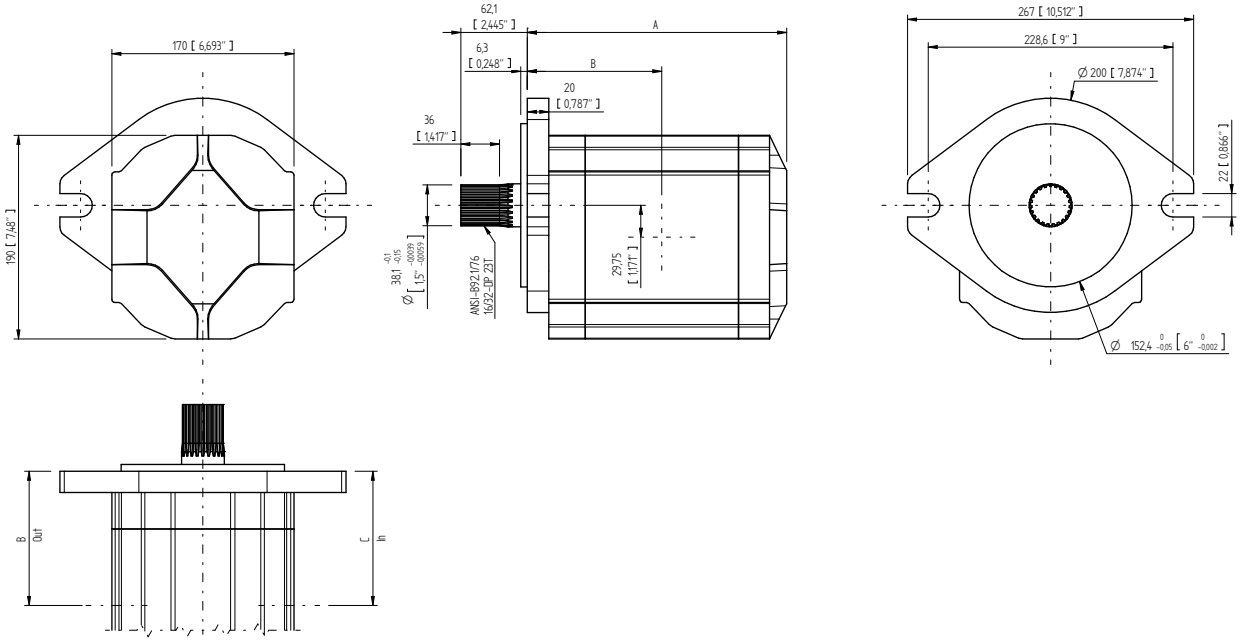

GR72 - TYPE / *TIPO* FSAED AT23																	
Type ***Tipo***	**CC**	**Flow Portata**		**Dimensions A** ***Dimensioni A***		**Dimensions B** ***Dimensioni B***		**Dimensions C** ***Dimensioni C***		**Continuous Pressure** ***Pressione continua***		**Intermittent Pressure** ***Pressione intermittente*** **(*)**		**Peak pressure** ***Picco pressione*** ***(*)***		**Noise level** ***Livello rumore***	**Max torque** ***Coppia max***
		L/min	**GPM**	**mm**	**inc**	**mm**	**inc**	**mm**	**inc**	**bar**	**PSI**	**bar**	**PSI**	**bar**	**PSI**	***dB***	***Nm***
94	94,1	136	35,927	245	9,646	125,5	4,941	128,5	4,941	240	3481	250	3626	260	3771	57	1200
101	101,4	147	38,833	248	9,764	127	5	134	5,276	230	3336	240	3481	250	3626		
125	125,5	181	47,815	258	10,157	132	5,197	145	5,709	220	3191	220	3191	230	3336		
150	150,9	218	57,589	268,5	10,571	137,25	5,404	150,25	5,915	200	2901	210	3046	220	3191		
175	175	253	66,836	278,5	10,965	142,25	5,6	155,25	6,112	180	2611	190	2756	200	2901		
200	200,4	290	76,610	289	11,378	147,5	5,807	160,5	6,319	160	2321	170	2466	180	2611		

Max torque / *Coppia max:* 1200 Nm
* Intermittent: cycle 20 sec. ON & 3 sec. OFF - Peak: cycle 1 sec. ON & 3 sec OFF. Intermittente: ciclo 20 sec. ON & 3 sec. OFF - Picco: ciclo 1 sec. ON & 3 sec OFF

GR72 INLET OUTLET PORTS / *PORTE DI ASPIRAZIONE E MANDATA* - **Type ME / *Tipo ME***

SAE 3000 2" ½
Inlet

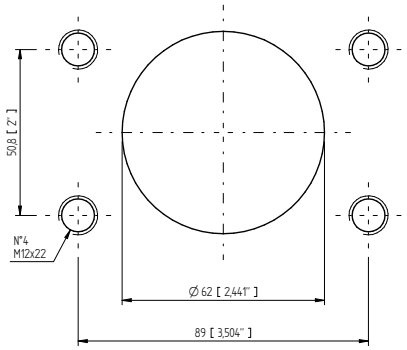

SAE 6000 1" ½
Outlet

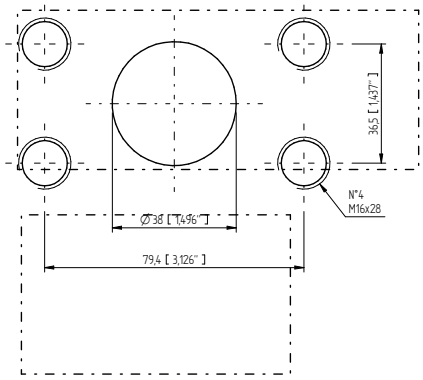

SETTIMA research & innovation, always

Flow performances @ 46 cSt

GR28 1-C3 / 1L-GL54 / 1L-G54

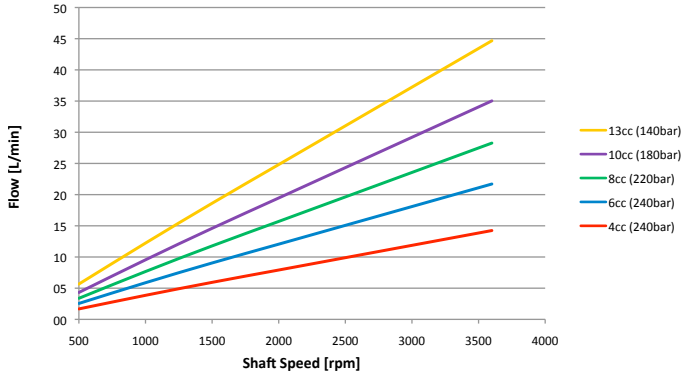

GR28 1P-C2

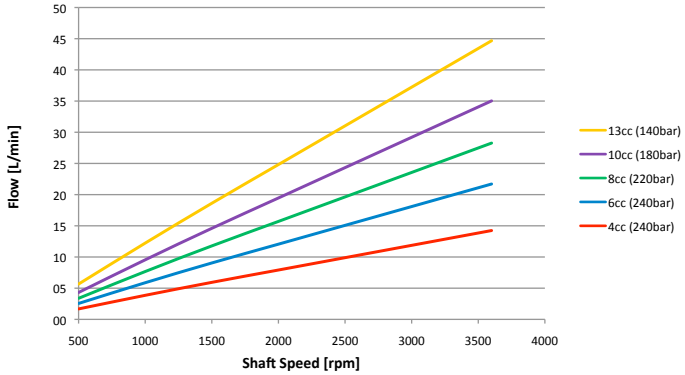

GR28 1K-G54 / 1K-GL54

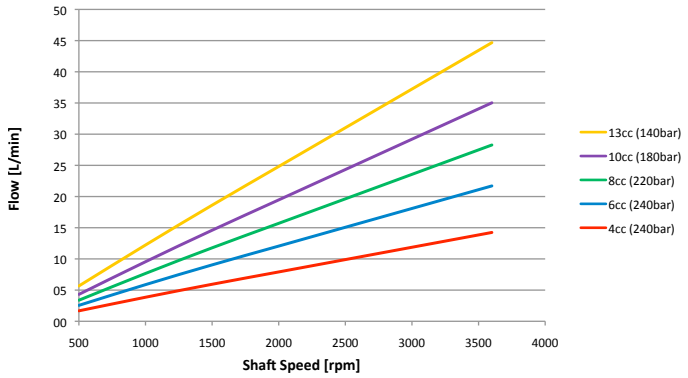

GR28 SAEA-AC

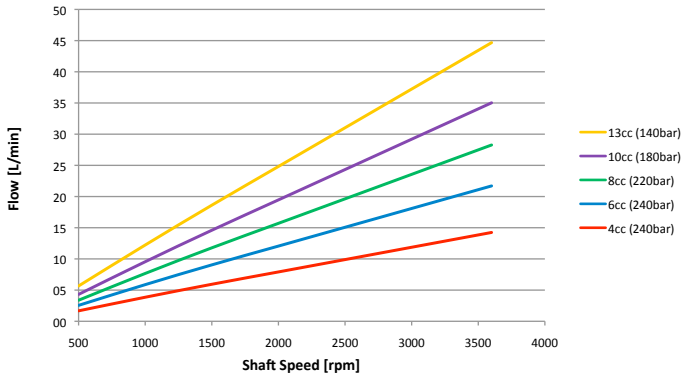

GR33

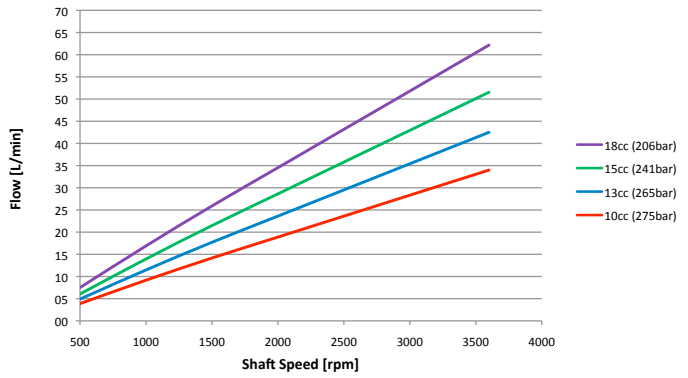

GR38

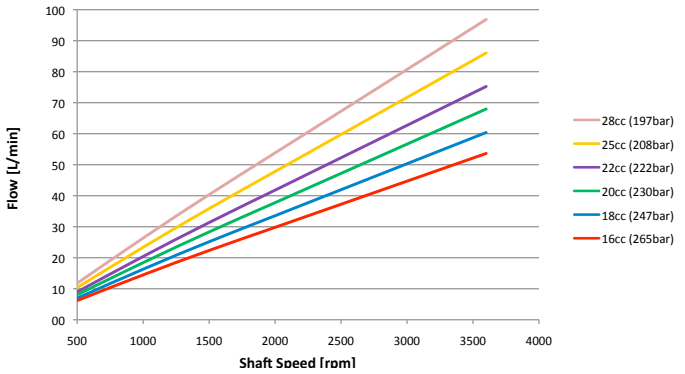

GR38 SAEA-T9

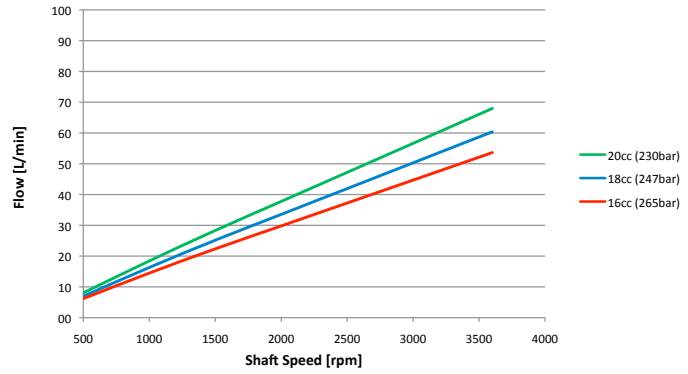

GR47

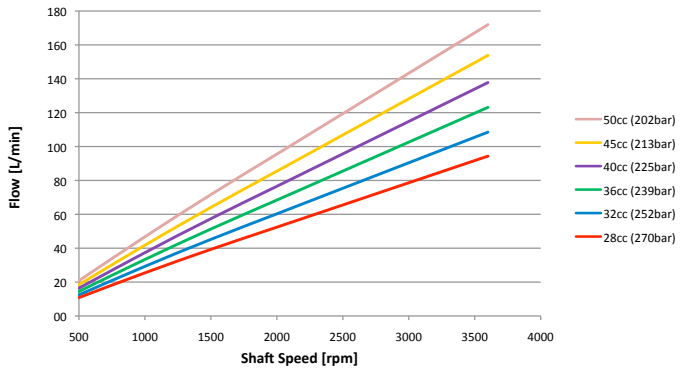

Flow performances @ 46 cSt

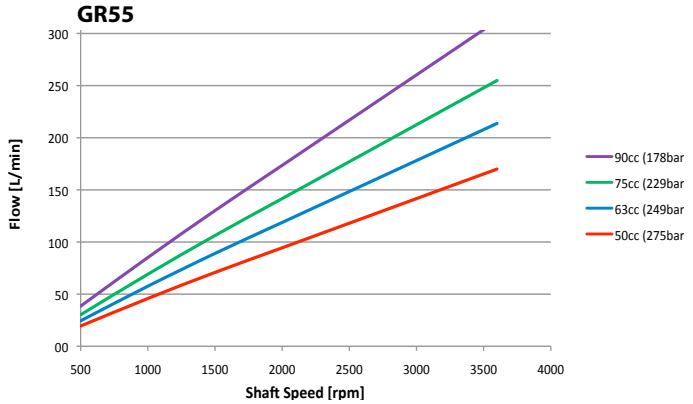

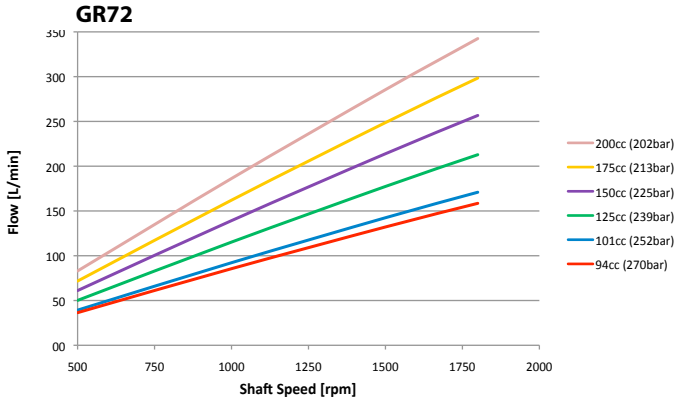

Power-torque performances @ 46 cSt

GR28 4 CC

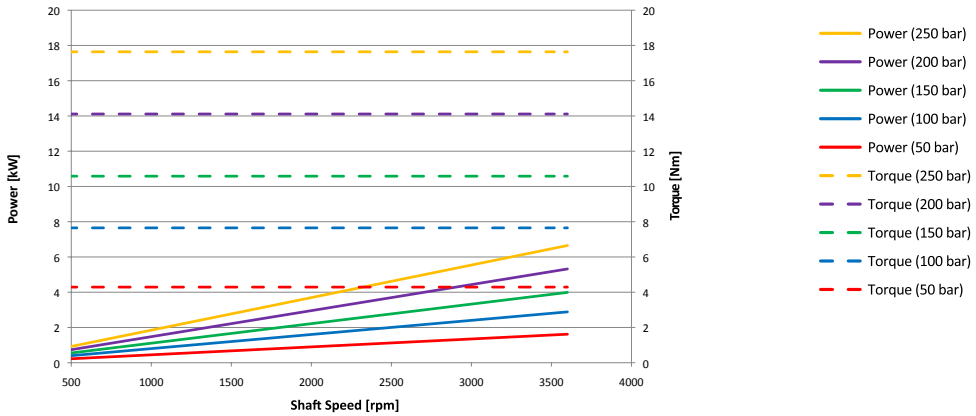

GR28 6 CC

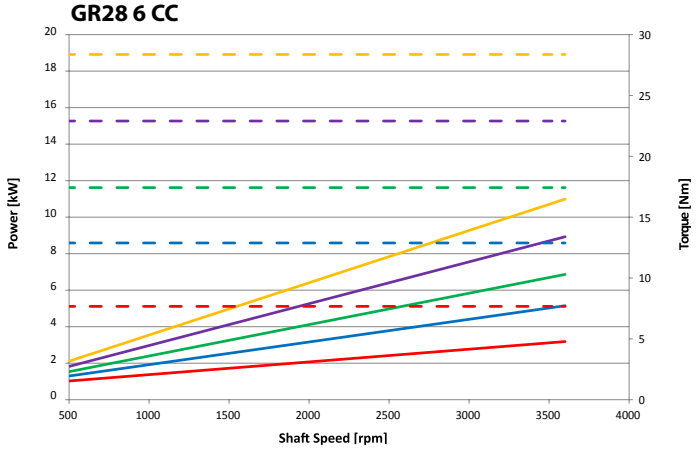

GR28 8 CC

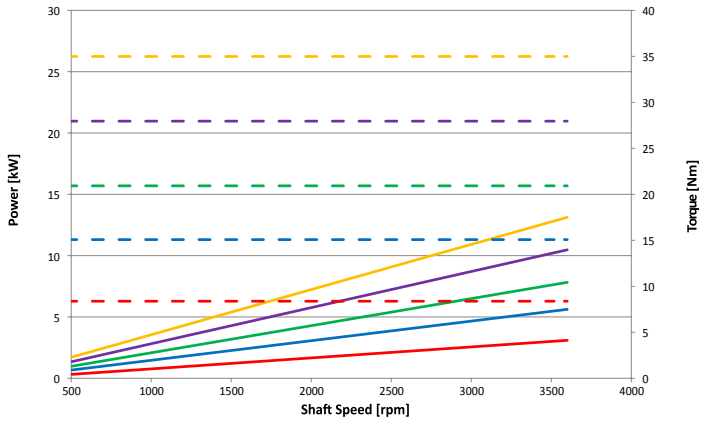

GR28 10 CC

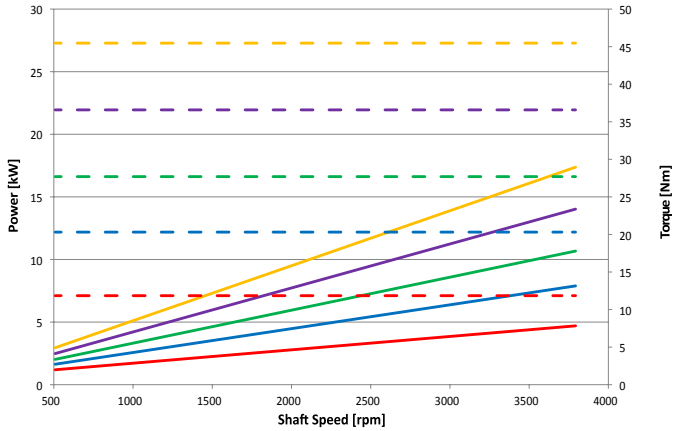

GR28 13 CC

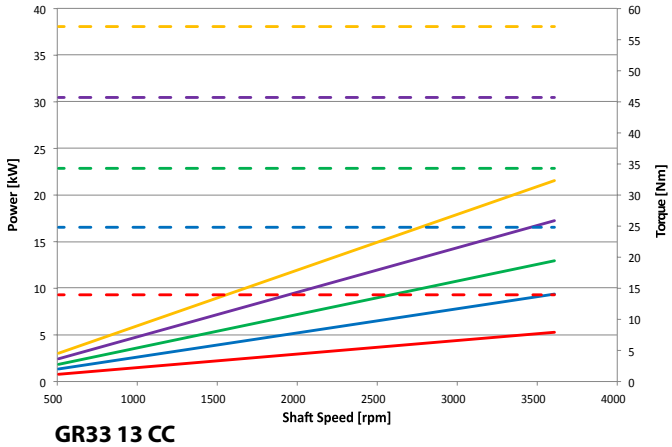

GR33 10 CC

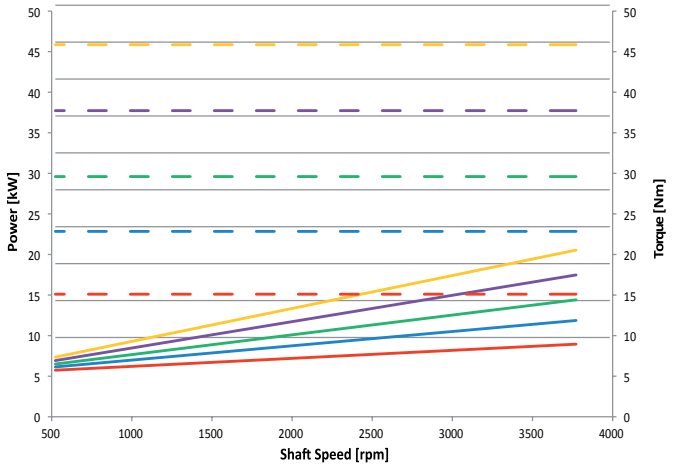

GR33 13 CC

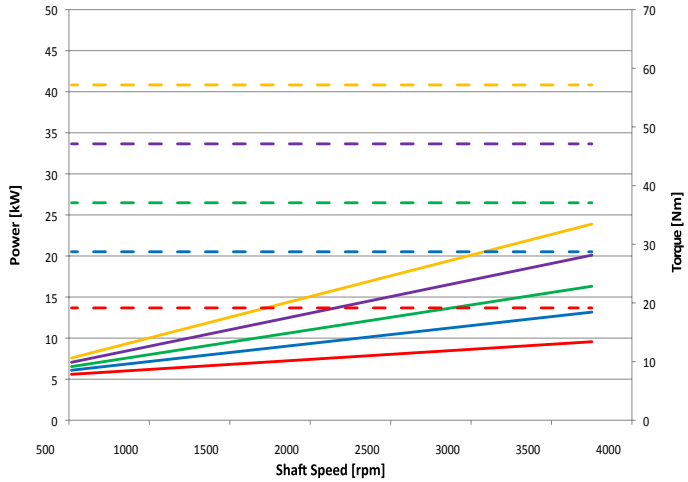

Power-torque performances @ 46 cSt

GR33 15 CC

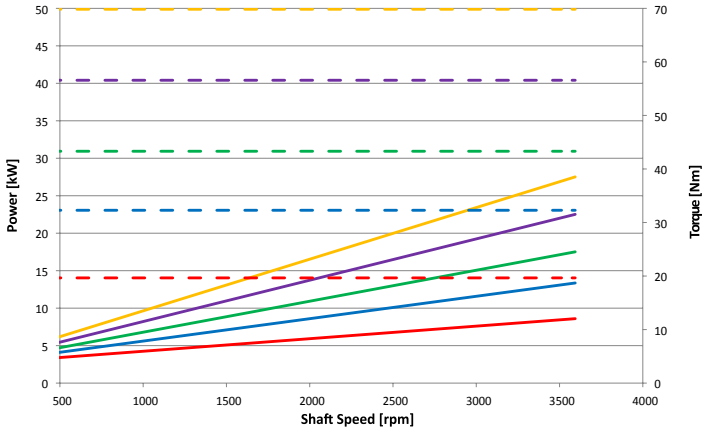

GR33 18 CC

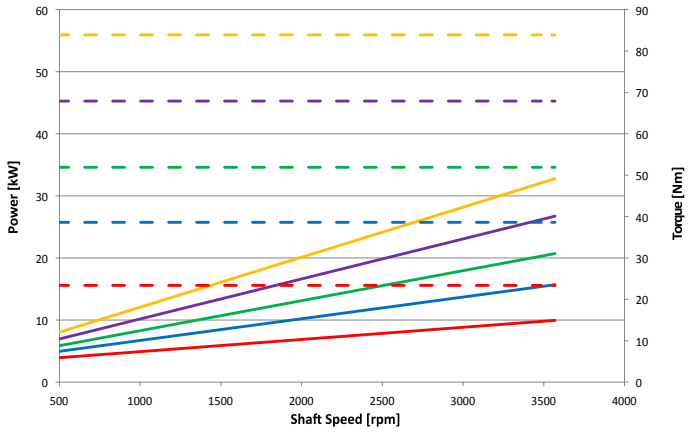

GR38 16 CC

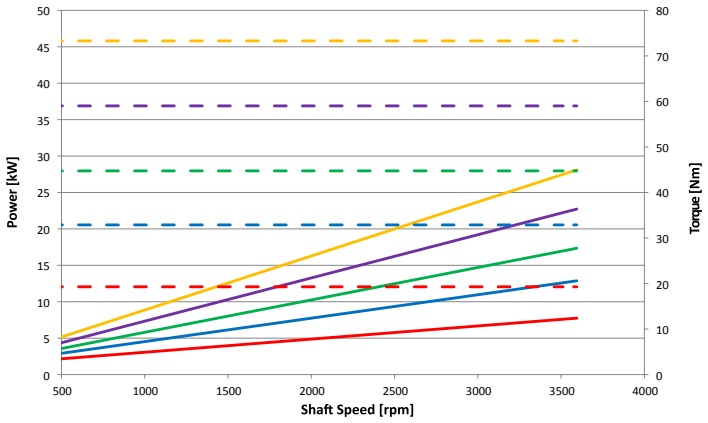

GR38 18 CC

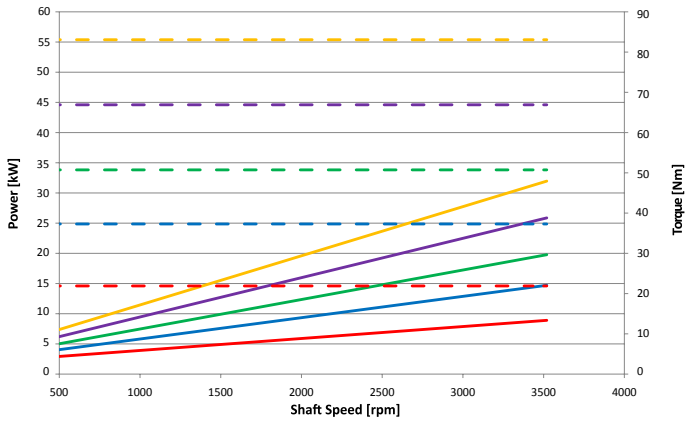

GR38 20 CC

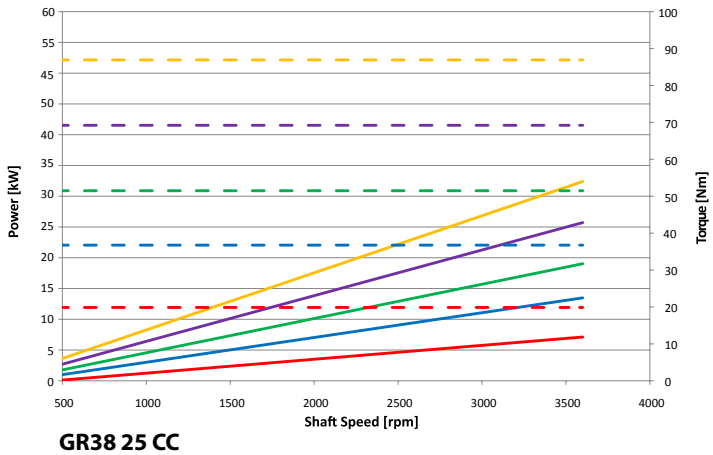

GR38 22 CC

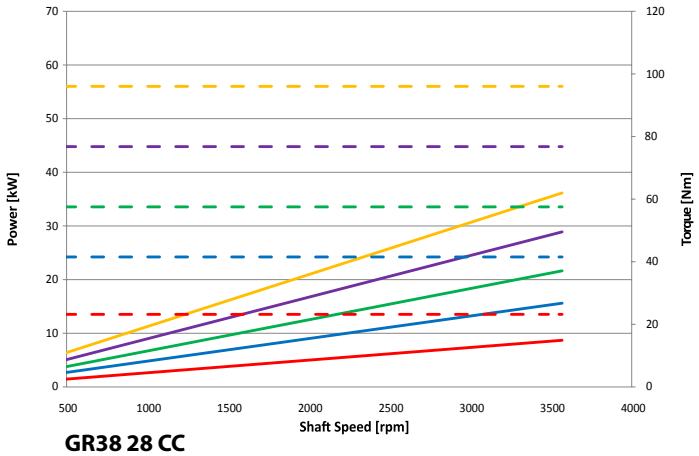

GR38 25 CC

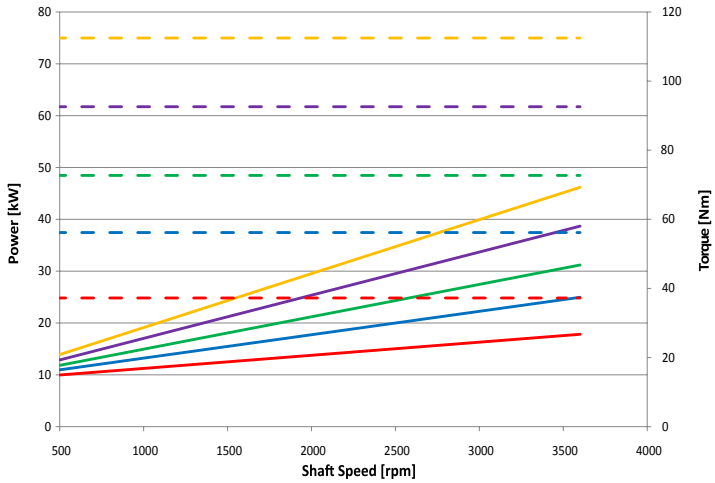

GR38 28 CC

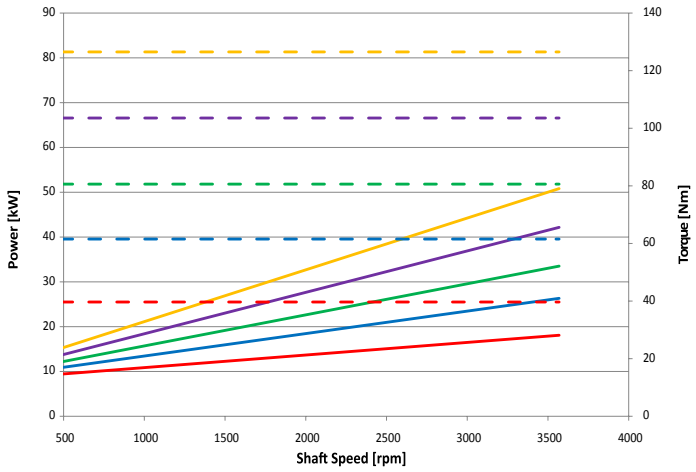

SETTIMA®
research & innovation, always

Power-torque performances @ 46 cSt

GR47 28 CC

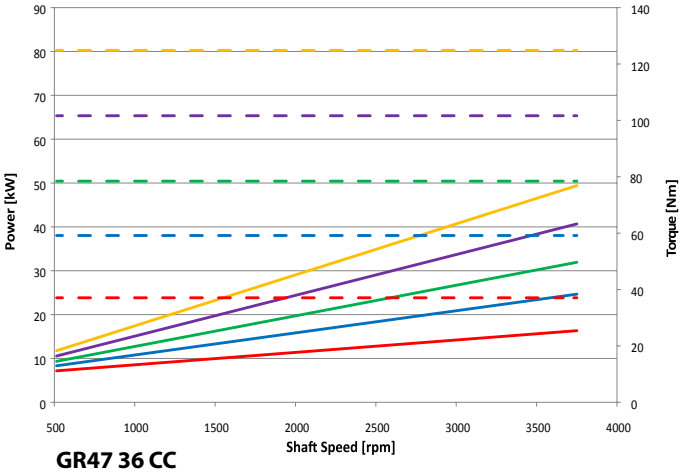

GR47 32 CC

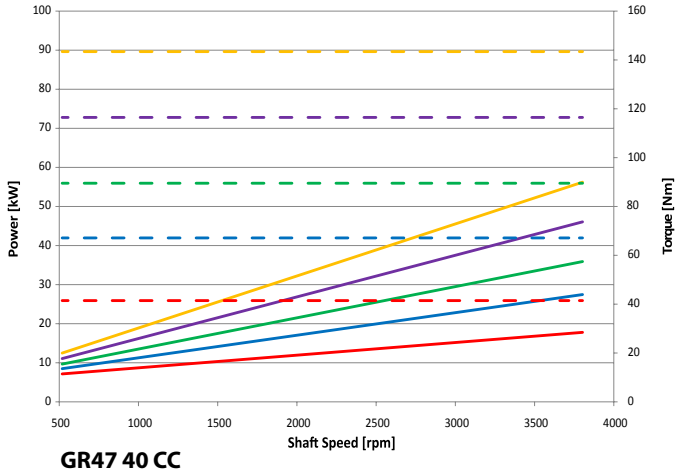

GR47 36 CC

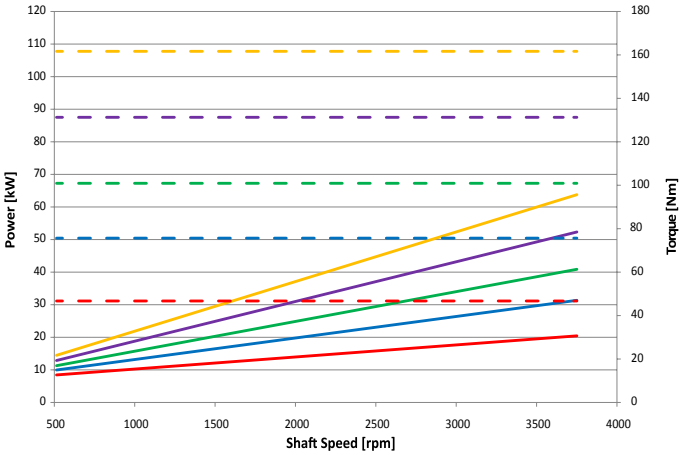

GR47 40 CC

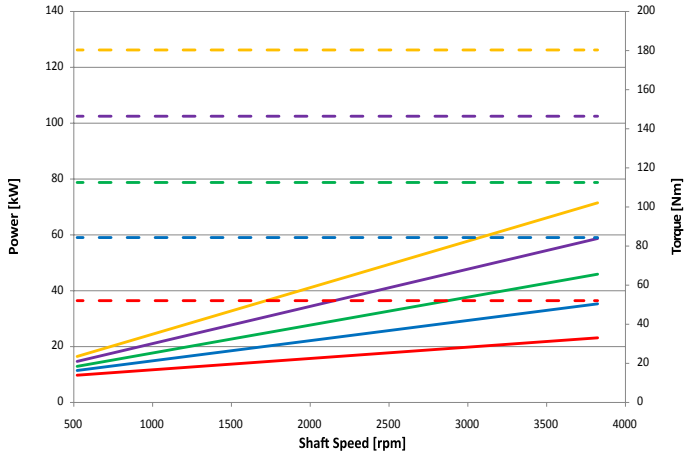

GR47 45 CC

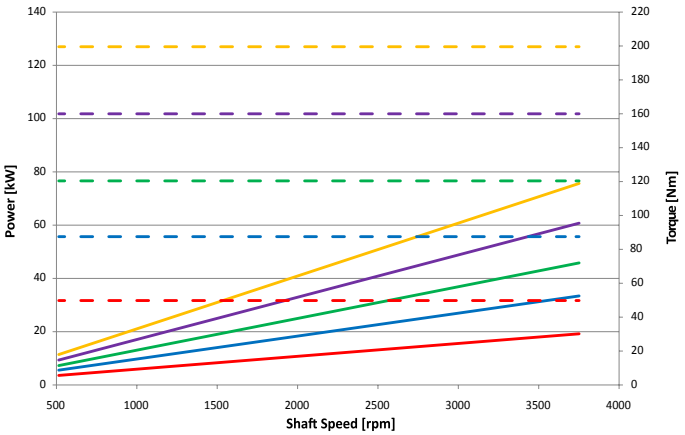

GR47 50 CC

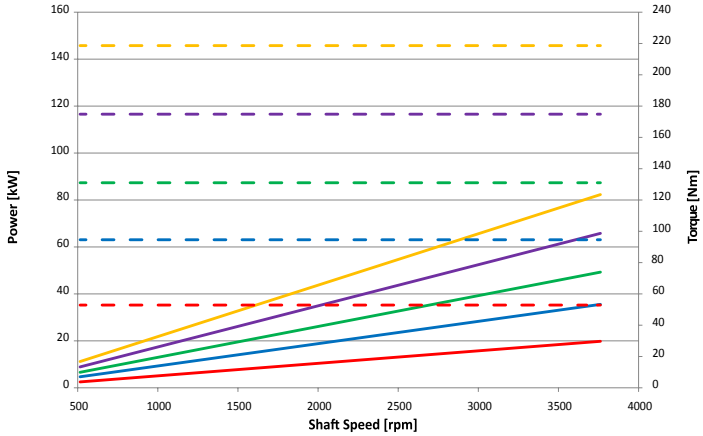

GR55 50 CC

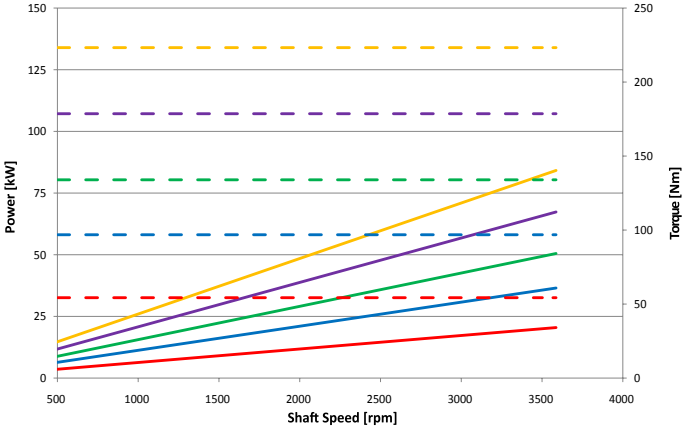

GR55 63 CC

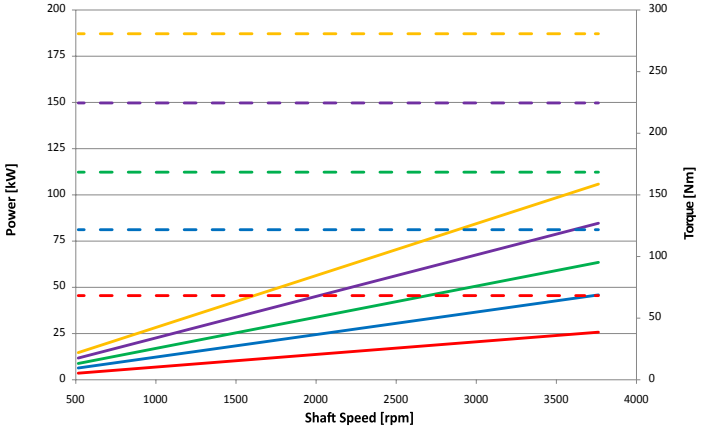

Power-torque performances @ 46 cSt

GR55 75

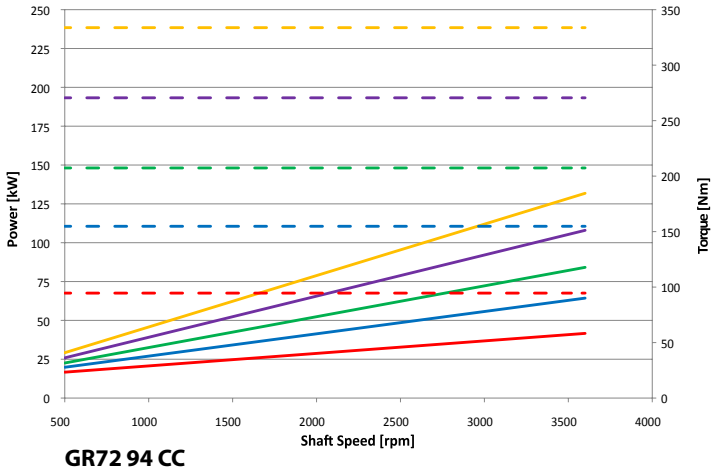

GR55 90 CC

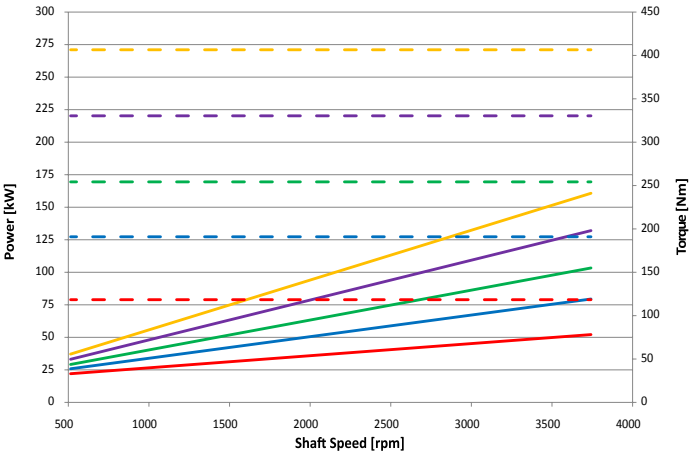

GR72 94 CC

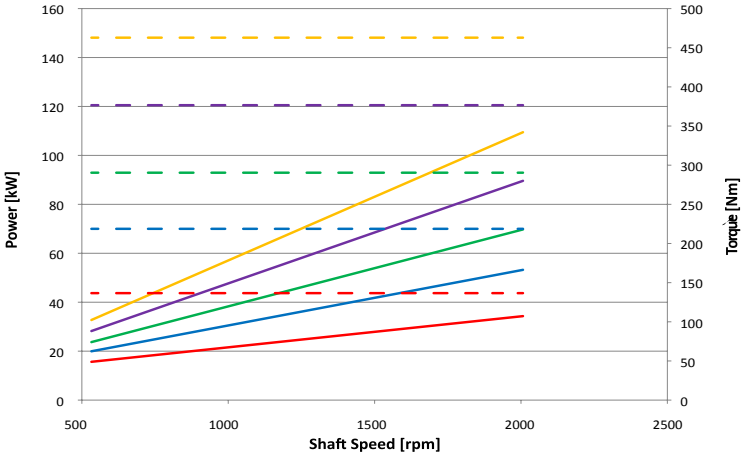

GR72 101 CC

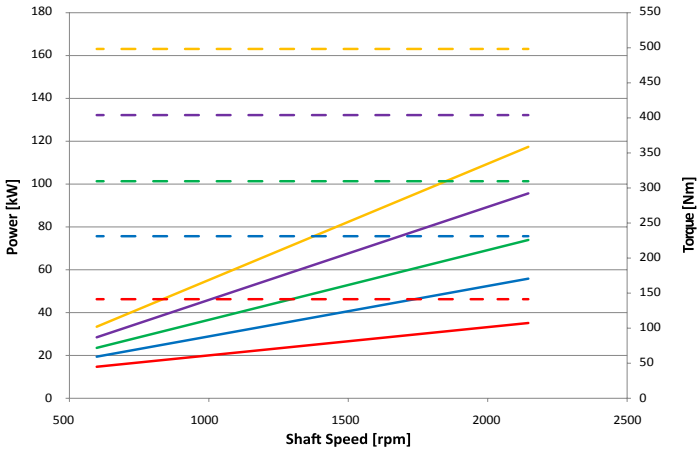

GR72 125 CC

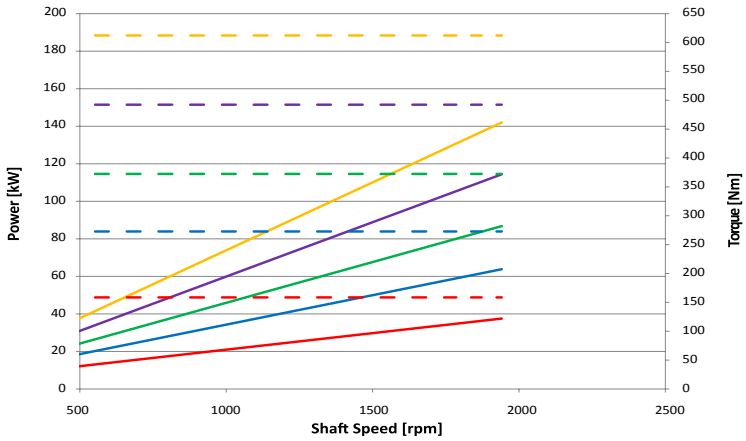

GR72 150 CC

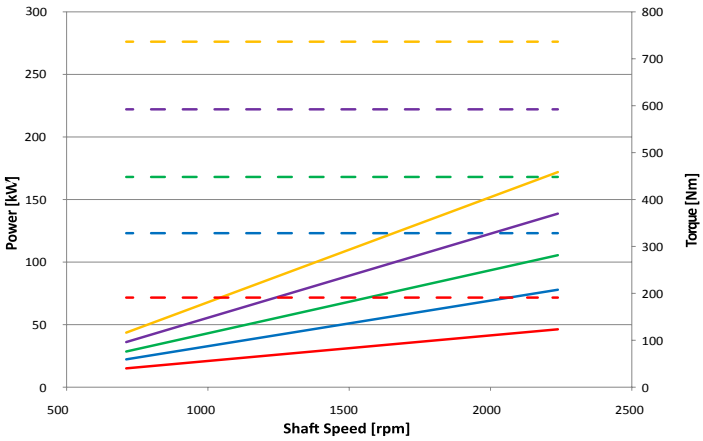

GR72 175 CC

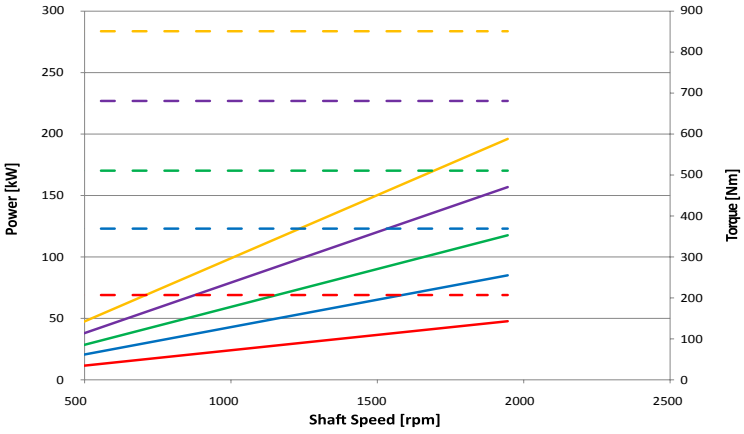

GR72 200 CC

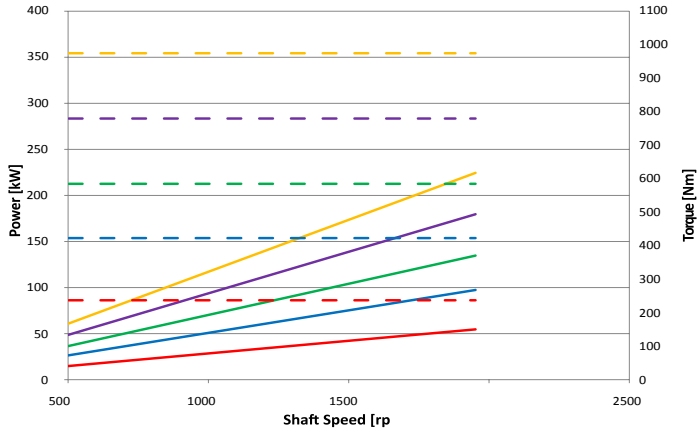

SETTIMA
research & innovation, always

Tandem & multiple pumps / Pompe doppie e multiple

Continuum® pumps are suitable for multiple setups, whereby the drive shaft of the first pump is extended to a second and even a third **Continuum®** pump. Each pump is connected to another by means of coupling. Each pump has its own suction port. Basically the technical specifications of single pumps apply also to multiple setups**. The maximum speed is determined by the highest pump speed rate in use. In case of multiple setup configurations, it is recommended to use the largest displacement for the first pump. The front pump may be equipped with different types of flange and shaft.

Ordering code / Codice ordine

Multiple setups / *Pompe multiple*

Type *Tipo*	Class *Classe*	Displacement *Cilindrata*	Flange & shaft *Flangia & albero*	Ports *Porte*	Type 2nd stage *Tipo 2° stadio*	*Displacement 2nd stage Cilindrata 2° stadio*	Ports *Porte*	Shaft seal *Guarnizione albero*	Rotation *Rotazione*
DG28	2V	004-006-008-010-013	F1AC3	G-U	GR28	004-006-008-010-013	G-U	Standard NBR (none) Optional FKM V	Standard DX (none) Optional SX*
DG33	2C	010-013-015-018	F2AC4	G-Q-U-M	GR28				
					GR33	010-013-015-018	G-Q-U		
					GR38	016-018-020-022-025-028			
DG38	2C	016-018-020-022-025-028	F2AC4	G-Q-U-M	GR28	004-006-008-010-013	G-U		
					GR33	010-013-015-018	G-Q-U		
					GR38	016-018-020-022-025-028			
DG47	2C	028-032-036-040-045-050	F3AC9 FSAEBAT13	G-O-U	GR28	004-006-008-010-013	G-U		
					GR33	010-013-015-018	G-Q-U		
					GR38	016-018-020-022-025-028			
					GR47	028-032-036-040-045-050	O-U		
DG55	2C	050-063-075-090	FSAEBAT15	O-OE	GR28	004-006-008-010-013	G-U		
					GR33	010-013-015-018	G-Q-U		
					GR38	016-018-020-022-025-028			
					GR47	028-032-036-040-045-050	O-U		
					GR55	050-063-075-090	O-OE		
DG72	2V	094-101-125-150-175-200-225	FSAEDAT23	ME	GR47	028-032-036-040-045-050	O-U		
					GR55	050-063-075-090	O-OE		
					GR72	094-101-125-150-175-200	ME		

* Please contact Settima for SX counter clockwise optional rotation. *Contattare Settima per rotazione SX opzionale.*
** The minimum operating pressure recommended for the second stage is 30 bar. In case of lower pressure, please, contact Settima. *Minima pressione di funzionamento consigliata per il secondo stadio 30 bar, al di sotto, contattare Settima.*

GR28 - Group 1 tandem pumps*

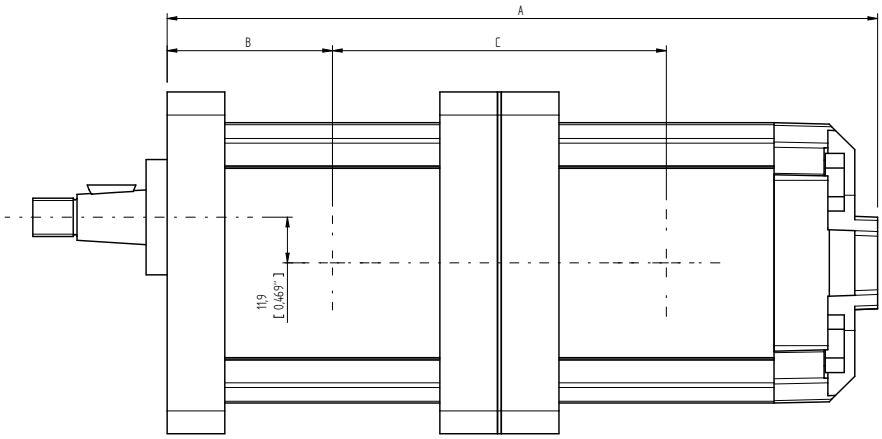

GR28 + GR28			GR28 - 2°									
			4		6		8		10		13	
			mm	inc	mm	inc	mm	inc	mm	inc	mm	inc
GR28 - 1°	4	A	191	7,52	196,5	7,73	201,5	7,93	206,5	8,13	213,4	8,40
		B	44,5	1,75	44,5	1,75	44,5	1,75	44,5	1,75	44,5	1,75
		C	90	3,54	92,75	3,65	95,25	3,75	97,75	3,85	101,2	3,98
	6	A	196,5	7,74	202	7,95	207	8,15	212	8,35	218,9	8,62
		B	47,25	1,86	47,25	1,86	47,25	1,86	47,25	1,86	47,25	1,86
		C	92,75	3,65	95,5	3,76	98	3,86	100,5	3,96	103,95	4,09
	8	A	201,5	7,93	207	8,15	212	8,35	217	8,54	223,9	8,81
		B	49,75	1,96	49,75	1,96	49,75	1,96	49,75	1,96	49,75	1,96
		C	95,25	3,75	98	3,86	100,5	3,96	103	4,06	106,45	4,19
	10	A	206,5	8,13	212	8,35	217	8,54	222	8,74	228,9	9,01
		B	52,25	2,06	52,25	2,06	52,25	2,06	52,25	2,06	52,25	2,06
		C	97,75	3,85	100,5	3,96	103	4,06	105,5	4,15	108,95	4,29
	13	A	213,4	8,40	218,9	8,62	223,9	8,81	228,9	9,01	235,8	9,28
		B	55,7	2,19	55,7	2,19	55,7	2,19	55,7	2,19	55,7	2,19
		C	101,2	3,98	103,95	4,09	106,45	4,19	108,95	4,29	112,4	4,43

Available flanges and shafts for GR28
Flange e alberi disponibili per GR28

Type flange 1C3 / *Flangia tipo 1 C3*

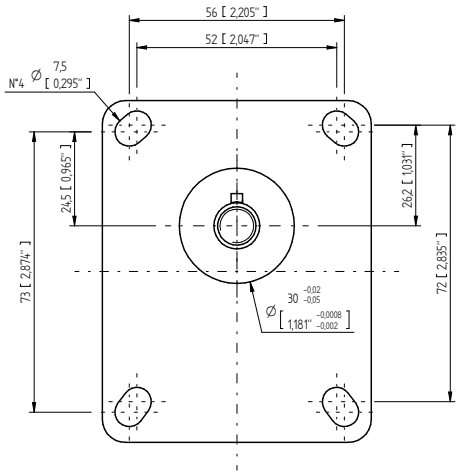

Type shaft 1C3 / *Albero tipo 1 C3*
Max torque / *Coppia max 100 Nm*

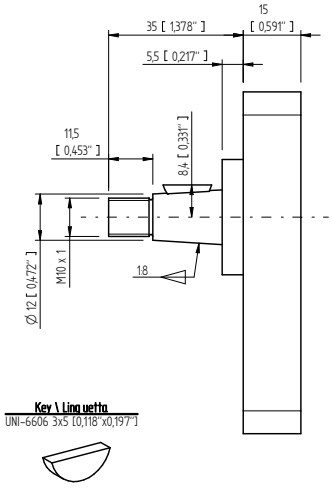

* Standard multiple pumps are delivered with both stages in fluid communication. When placing an order, it is necessary to specify if the two stages will handle different kinds of fluids or fluids coming from more than one reservoir. / *Le pompe multiple sono consegnate con entrambi gli stadi in comunicazione di fluido. In fase di ordine, occorre specificare se la pompa multipla utilizza oli differenti sui diversi stadi o provenienti da più di un serbatoio.*

SETTIMA research & innovation, always

GR33 - Groups 2 tandem pumps*

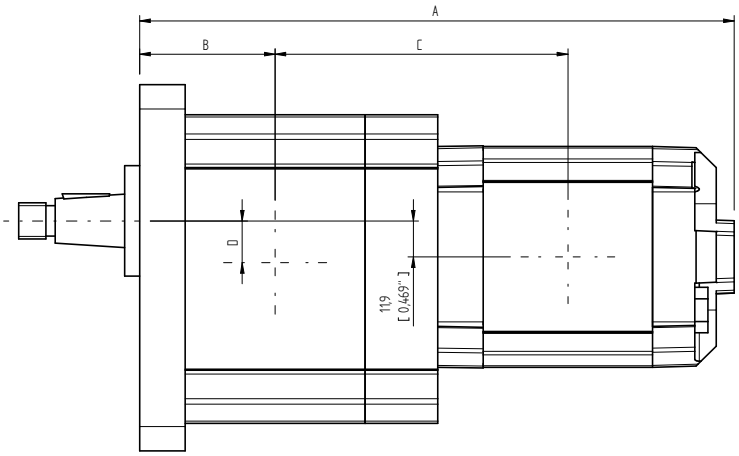

GR33 + GR28			GR28 - 2°									
			4		6		8		10		13	
			mm	inc	mm	inc	mm	inc	mm	inc	mm	inc
GR33 - 1°	10	A	217,5	8,56	223	8,78	228	8,98	233	9,17	239,9	9,44
		B	53,75	2,12	53,75	2,12	53,75	2,12	53,75	2,12	53,75	2,12
		C	107,25	4,22	110	4,33	112,5	4,43	115	4,53	118,45	4,67
		D	13,75	0,54	13,75	0,54	13,75	0,54	13,75	0,54	13,75	0,54
	13	A	222,4	8,76	227,9	8,97	232,9	9,17	237,9	9,37	244,8	9,64
		B	56,2	2,21	56,2	2,21	56,2	2,21	56,2	2,21	56,2	2,21
		C	109,7	4,32	112,45	4,43	114,95	4,53	117,45	4,62	120,9	4,76
		D	13,75	0,54	13,75	0,54	13,75	0,54	13,75	0,54	13,75	0,54
	15	A	227,4	8,95	232,9	9,17	237,9	9,37	242,9	9,56	249,8	9,83
		B	58,7	2,31	58,7	2,31	58,7	2,31	58,7	2,31	58,7	2,31
		C	112,2	4,42	114,95	4,53	117,45	4,63	119,95	4,72	123,4	4,86
		D	13,75	0,54	13,75	0,54	13,75	0,54	13,75	0,54	13,75	0,54
	18	A	233,2	9,18	238,7	9,40	243,7	9,59	248,7	9,79	255,6	10,06
		B	61,6	2,43	61,6	2,43	61,6	2,43	61,6	2,43	61,6	2,43
		C	115,1	4,53	117,85	4,64	120,35	4,74	122,85	4,84	126,3	4,97
		D	13,75	0,54	13,75	0,54	13,75	0,54	13,75	0,54	13,75	0,54

* Standard multiple pumps are delivered with both stages in fluid communication. When placing an order, it is necessary to specify if the two stages will handle different kinds of fluids or fluids coming from more than one reservoir. / *Le pompe multiple sono consegnate con entrambi gli stadi in comunicazione di fluido. In fase di ordine, occorre specificare se la pompa multipla utilizza oli differenti sui diversi stadi o provenienti da più di un serbatoio.*

GR33 - Groups 2 tandem pumps*

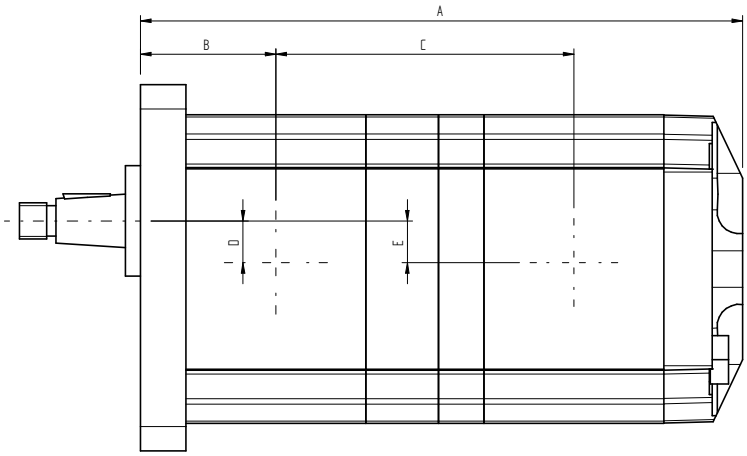

GR33 + GR33			GR33 - 2°							
			10		13		15		18	
			mm	inc	mm	inc	mm	inc	mm	inc
GR33 - 1°	10	A	218	8,58	222,9	8,78	227,9	8,97	233,7	9,20
		B	53,75	2,11	53,75	2,12	53,75	2,12	53,75	2,12
		C	106,5	4,19	108,95	4,29	111,45	4,39	114,35	4,50
		D	13,75	0,54	13,75	0,54	13,75	0,54	13,75	0,54
		E	13,75	0,54	13,75	0,54	13,75	0,54	13,75	0,54
	13	A	222,9	8,78	227,8	8,97	232,8	9,17	238,6	9,39
		B	56,2	2,21	56,2	2,21	56,2	2,21	56,2	2,21
		C	108,95	4,29	111,4	4,39	113,9	4,48	116,8	4,60
		D	13,75	0,54	13,75	0,54	13,75	0,54	13,75	0,54
		E	13,75	0,54	13,75	0,54	13,75	0,54	13,75	0,54
	15	A	227,9	8,97	232,8	9,17	237,8	9,36	243,6	9,59
		B	58,7	2,31	58,7	2,31	58,7	2,31	58,7	2,31
		C	111,45	4,39	113,9	4,48	116,4	4,58	119,3	4,70
		D	13,75	0,54	13,75	0,54	13,75	0,54	13,75	0,54
		E	13,75	0,54	13,75	0,54	13,75	0,54	13,75	0,54
	18	A	233,7	9,20	238,6	9,39	243,6	9,59	249,4	9,82
		B	61,6	2,43	61,6	2,43	61,6	2,43	61,6	2,43
		C	114,35	4,50	116,8	4,60	119,3	4,70	122,2	4,81
		D	13,75	0,54	13,75	0,54	13,75	0,54	13,75	0,54
		E	13,75	0,54	13,75	0,54	13,75	0,54	13,75	0,54

Available flanges and shafts for GR33
Flange ed alberi disponibili per GR33

Type flange 2C4 /
Flangia tipo 2C4

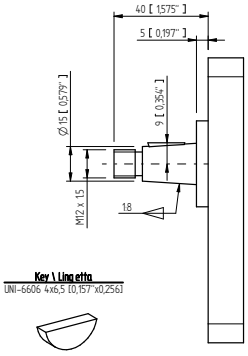

Type shaft 2C4 /
Albero tipo 2C4
Max torque /
Coppia max 210 Nm

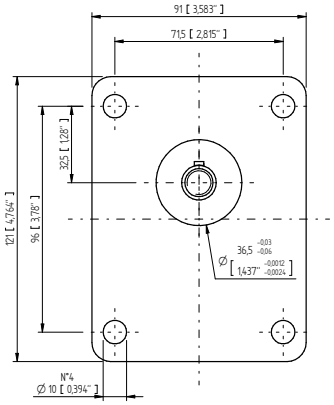

* Standard multiple pumps are delivered with both stages in fluid communication. When placing an order, it is necessary to specify if the two stages will handle different kinds of fluids or fluids coming from more than one reservoir. / *Le pompe multiple sono consegnate con entrambi gli stadi in comunicazione di fluido. In fase di ordine, occorre specificare se la pompa multipla utilizza oli differenti sui diversi stadi o provenienti da più di un serbatoio.*

SETTIMA research & innovation, always

GR38 - Groups 2 tandem pumps*

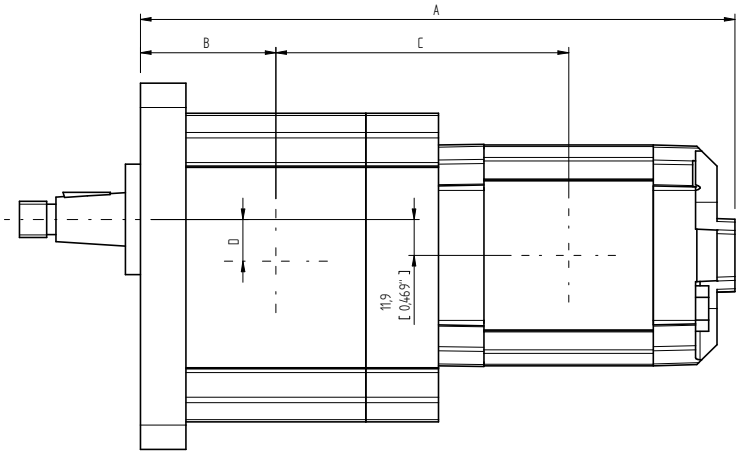

GR38 + GR28			GR28 - 2°									
			4		6		8		10		13	
			mm	inc	mm	inc	mm	inc	mm	inc	mm	inc
GR38 - 1°	16	A	224	8,81	229,5	9,03	234,5	9,23	239,5	9,429	246,4	9,701
		B	55,5	2,18	55,5	2,18	55,5	2,185	55,5	2,185	55,5	2,185
		C	112	4,40	114,75	4,51	117,25	4,61	119,75	4,71	123,2	4,85
		D	15,9	0,62	15,9	0,62	15,9	0,62	15,9	0,62	15,9	0,62
	18	A	227	8,93	232,5	9,15	237,5	9,35	242,5	9,54	249,4	9,81
		B	57	2,24	57	2,24	57	2,24	57	2,24	57	2,24
		C	113,5	4,46	116,25	4,57	118,75	4,67	121,25	4,77	124,7	4,90
		D	15,9	0,62	15,9	0,62	15,9	0,62	15,9	0,62	15,9	0,62
	20	A	230	9,05	235,5	9,27	240,5	9,46	245,5	9,66	252,4	9,93
		B	58,5	2,30	58,5	2,30	58,5	2,30	58,5	2,30	58,5	2,30
		C	115	4,52	117,75	4,63	120,25	4,73	122,75	4,83	126,2	4,96
		D	15,9	0,626	15,9	0,62	15,9	0,62	15,9	0,62	15,9	0,62
	22	A	233	9,173	238,5	9,39	243,5	9,58	248,5	9,78	255,4	10,05
		B	60	2,36	60	2,36	60	2,36	60	2,36	60	2,36
		C	116,5	4,58	119,25	4,69	121,75	4,79	124,25	4,89	127,7	5,02
		D	15,9	0,62	15,9	0,62	15,9	0,62	15,9	0,62	15,9	0,62
	25	A	237,5	9,35	243	9,56	248	9,76	253	9,96	259,9	10,23
		B	62,25	2,45	62,25	2,45	62,25	2,45	62,25	2,45	62,25	2,45
		C	118,75	4,67	121,5	4,78	124	4,88	126,5	4,98	129,95	5,11
		D	15,9	0,62	15,9	0,62	15,9	0,62	15,9	0,62	15,9	0,62
	28	A	242	9,52	247,5	9,74	252,5	9,94	257,5	10,13	264,4	10,40
		B	64,5	2,53	64,5	2,53	64,5	2,53	64,5	2,53	64,5	2,53
		C	121	4,76	123,75	4,87	126,25	4,97	128,75	5,06	132,2	5,20
		D	15,9	0,626	15,9	0,62	15,9	0,62	15,9	0,62	15,9	0,62

GR38 - Groups 2 tandem pumps*

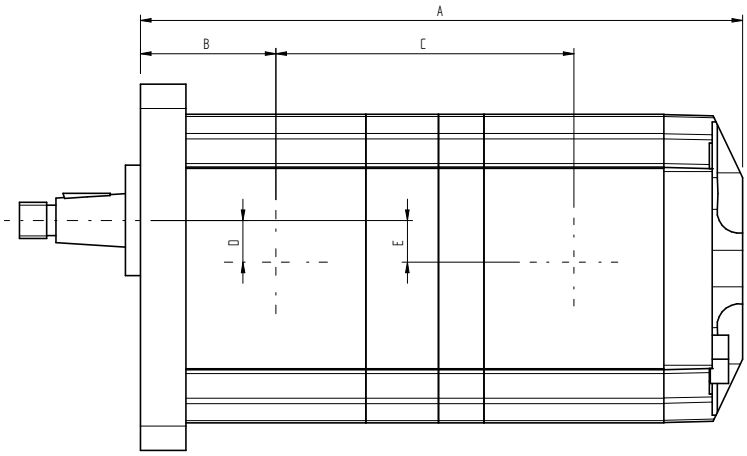

GR38 + GR33			GR33 - 2°							
			10		13		15		18	
			mm	inc	mm	inc	mm	inc	mm	inc
GR38 - 1°	16	A	224,5	8,84	229,4	9,03	234,4	9,23	240,2	9,46
		B	55,5	2,19	55,5	2,19	55,5	2,19	55,5	2,19
		C	111,25	4,38	113,7	4,48	116,2	4,57	119,1	4,69
		D	15,9	0,63	15,9	0,63	15,9	0,63	15,9	0,63
		E	13,75	0,54	13,75	0,54	13,75	0,54	13,75	0,54
	18	A	227,5	8,96	232,4	9,15	237,4	9,35	243,2	9,57
		B	57	2,24	57	2,24	57	2,24	57	2,24
		C	112,75	4,44	115,2	4,54	117,7	4,63	120,6	4,75
		D	15,9	0,63	15,9	0,63	15,9	0,63	15,9	0,63
		E	13,75	0,54	13,75	0,54	13,75	0,54	13,75	0,54
	20	A	230,5	9,07	235,4	9,27	240,4	9,46	246,2	9,69
		B	58,5	2,30	58,5	2,30	58,5	2,30	58,5	2,30
		C	114,25	4,50	116,7	4,59	119,2	4,69	122,1	4,81
		D	15,9	0,63	15,9	0,63	15,9	0,63	15,9	0,63
		E	13,75	0,54	13,75	0,54	13,75	0,54	13,75	0,54
	22	A	233,5	9,19	238,4	9,39	243,4	9,58	249,2	9,81
		B	60	2,36	60	2,36	60	2,36	60	2,36
		C	115,75	4,56	118,2	4,65	120,7	4,75	123,6	4,87
		D	15,9	0,63	15,9	0,63	15,9	0,63	15,9	0,63
		E	13,75	0,54	13,75	0,54	13,75	0,54	13,75	0,54
	25	A	238	9,37	242,9	9,56	247,9	9,76	253,7	9,99
		B	62,25	2,45	62,25	2,45	62,25	2,45	62,25	2,45
		C	118	4,65	120,45	4,74	122,95	4,84	125,85	4,96
		D	15,9	0,63	15,9	0,63	15,9	0,63	15,9	0,63
		E	13,75	0,54	13,75	0,54	13,75	0,54	13,75	0,54
	28	A	242,5	9,55	247,4	9,74	252,4	9,94	258,2	10,17
		B	64,5	2,54	64,5	2,54	64,5	2,54	64,5	2,54
		C	120,25	4,74	122,7	4,83	125,2	4,93	128,1	5,04
		D	15,9	0,63	15,9	0,63	15,9	0,63	15,9	0,63
		E	13,75	0,54	13,75	0,54	13,75	0,54	13,75	0,54

SETTIMA research & innovation, always

GR38 - Groups 2 tandem pumps*

GR38 + GR38			GR38 - 2°											
			16		18		20		22		25		28	
			mm	inc	mm	inc	mm	inc	mm	inc	mm	inc	mm	inc
GR38 - 1°	16	A	228	8,98	231	9,09	234	9,21	237	9,33	241,5	9,51	246	9,69
		B	55,5	2,19	55,5	2,19	55,5	2,19	55,5	2,19	55,5	2,19	55,5	2,19
		C	113	4,45	114,5	4,51	116	4,57	117,5	4,63	119,75	4,71	122	4,80
		D	15,9	0,63	15,9	0,63	15,9	0,63	15,9	0,63	15,9	0,63	15,9	0,63
		E	15,9	0,63	15,9	0,63	15,9	0,63	15,9	0,63	15,9	0,63	15,9	0,63
	18	A	231	9,09	234	9,21	237	9,33	240	9,45	244,5	9,63	249	9,80
		B	57	2,24	57	2,24	57	2,24	57	2,24	57	2,24	57	2,24
		C	114,5	4,51	116	4,57	117,5	4,63	119	4,69	121,25	4,77	123,5	4,86
		D	15,9	0,63	15,9	0,63	15,9	0,63	15,9	0,63	15,9	0,63	15,9	0,63
		E	15,9	0,63	15,9	0,63	15,9	0,63	15,9	0,63	15,9	0,63	15,9	0,63
	20	A	234	9,21	237	9,33	240	9,45	243	9,57	247,5	9,74	252	9,92
		B	58,5	2,30	58,5	2,30	58,5	2,30	58,5	2,30	58,5	2,30	58,5	2,30
		C	116	4,57	117,5	4,63	119	4,69	120,5	4,74	122,75	4,83	125	4,92
		D	15,9	0,63	15,9	0,63	15,9	0,63	15,9	0,63	15,9	0,63	15,9	0,63
		E	15,9	0,63	15,9	0,63	15,9	0,63	15,9	0,63	15,9	0,63	15,9	0,63
	22	A	237	9,33	240	9,45	243	9,57	246	9,69	250,5	9,86	255	10,04
		B	60	2,36	60	2,36	60	2,36	60	2,36	60	2,36	60	2,36
		C	117,5	4,63	119	4,69	120,5	4,74	122	4,80	124,25	4,89	126,5	4,98
		D	15,9	0,63	15,9	0,63	15,9	0,63	15,9	0,63	15,9	0,63	15,9	0,63
		E	15,9	0,63	15,9	0,63	15,9	0,63	15,9	0,63	15,9	0,63	15,9	0,63
	25	A	241,5	9,51	244,5	9,63	247,5	9,74	250,5	9,86	255	10,04	259,5	10,22
		B	62,25	2,45	62,25	2,45	62,25	2,45	62,25	2,45	62,25	2,45	62,25	2,45
		C	119,75	4,72	121,25	4,77	122,75	4,83	124,25	4,89	126,5	4,98	128,75	5,07
		D	15,9	0,63	15,9	0,63	15,9	0,63	15,9	0,63	15,9	0,63	15,9	0,63
		E	15,9	0,63	15,9	0,63	15,9	0,63	15,9	0,63	15,9	0,63	15,9	0,63
	28	A	246	9,69	249	9,80	252	9,92	255	10,04	259,5	10,22	264	10,39
		B	64,5	2,54	64,5	2,54	64,5	2,54	64,5	2,54	64,5	2,54	64,5	2,54
		C	122	4,80	123,5	4,86	125	4,92	126,5	4,98	128,75	5,07	131	5,16
		D	15,9	0,63	15,9	0,63	15,9	0,63	15,9	0,63	15,9	0,63	15,9	0,63
		E	15,9	0,63	15,9	0,63	15,9	0,63	15,9	0,63	15,9	0,63	15,9	0,63

Available flanges and shafts for GR38
Flange ed alberi disponibili per GR38

Type flange 2C4 /
Flangia tipo 2C4

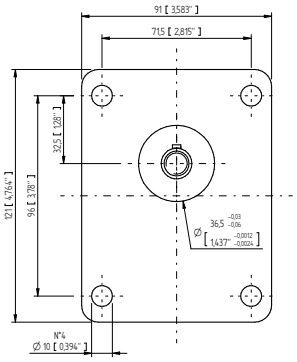

Type shaft 2C4 /
Albero tipo 2C4
Max torque /
Coppia max 210 Nm

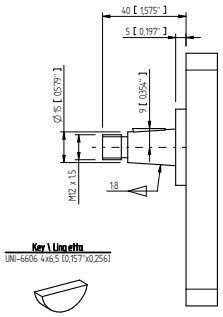

* Standard multiple pumps are delivered with both stages in fluid communication. When placing an order, it is necessary to specify if the two stages will handle different kinds of fluids or fluids coming from more than one reservoir. / *Le pompe multiple sono consegnate con entrambi gli stadi in comunicazione di fluido. In fase di ordine, occorre specificare se la pompa multipla utilizza oli differenti sui diversi stadi o provenienti da più di un serbatoio.*

GR47 - Group 3 tandem pumps

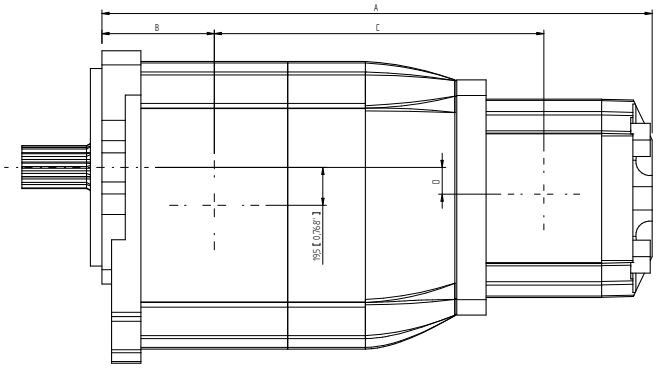

GR47 + GR28			GR28 - 2°									
			4		6		8		10		13	
			mm	inc	mm	inc	mm	inc	mm	inc	mm	inc
GR47 - 1°	28	A	293	11,54	298,50	11,75	303,5	11,95	308,5	12,15	315,4	12,42
		B	67,5	2,66	67,5	2,66	67,5	2,66	67,5	2,66	67,5	2,66
		C	169	6,65	171,75	6,76	174,25	6,86	176,75	6,96	180,20	7,10
		D	11,9	0,47	11,9	0,47	11,9	0,47	11,9	0,47	11,9	0,47
	32	A	297	11,69	302,5	11,91	307,5	12,11	312,5	12,30	319,4	12,57
		B	69,5	2,74	69,5	2,74	69,5	2,74	69,5	2,74	69,5	2,74
		C	171	6,73	173,75	6,84	176,25	6,94	178,75	7,04	182,2	7,17
		D	11,9	0,47	11,9	0,47	11,9	0,47	11,9	0,47	11,9	0,47
	36	A	301	11,85	306,5	12,07	311,5	12,26	316,5	12,46	323,4	12,73
		B	71,5	2,81	71,5	2,81	71,5	2,81	71,5	2,81	71,5	2,81
		C	173	6,81	175,75	6,91	178,25	7,01	180,75	7,11	184,2	7,25
		D	11,9	0,47	11,9	0,47	11,9	0,47	11,9	0,47	11,9	0,47
	40	A	305	12,01	310,5	12,22	315,5	12,42	320,5	12,62	327,4	12,89
		B	73,5	2,89	73,5	2,89	73,5	2,89	73,5	2,89	73,5	2,89
		C	175	6,89	177,75	7,00	180,25	7,96	182,75	7,19	186,2	7,33
		D	11,9	0,47	11,9	0,47	11,9	0,47	11,9	0,47	11,9	0,47
	45	A	309,5	12,19	315	12,40	320	12,60	325	12,80	331,9	13,07
		B	75,75	2,98	75,75	2,98	75,75	2,98	75,75	2,98	75,75	2,98
		C	177,25	6,98	180	7,09	182,5	7,19	185	7,28	188,45	7,42
		D	11,9	0,47	11,9	0,47	11,9	0,47	11,9	0,47	11,9	0,47
	50	A	314,5	12,38	320	12,60	325	12,80	330	12,99	336,9	13,26
		B	78,25	3,08	78,25	3,08	78,25	3,08	78,25	3,08	78,25	3,08
		C	179,75	7,08	182,50	7,19	185	7,28	187,5	7,38	190,95	7,52
		D	11,9	0,47	11,9	0,47	11,9	0,47	11,9	0,47	11,9	0,47

SETTIMA research & innovation, always

GR47 + GR33			GR33 - 2°							
			10		13		15		18	
			mm	inc	mm	inc	mm	inc	mm	inc
GR47 - 1°	28	A	306,5	12,07	311,4	12,26	316,4	12,46	322,2	12,69
		B	67,5	2,66	67,5	2,66	67,5	2,66	67,5	2,66
		C	181,25	7,14	183,7	7,23	186,2	7,33	189,1	7,44
		D	13,75	0,54	13,75	0,54	13,75	0,54	13,75	0,54
	32	A	310,5	12,22	315,4	12,42	320,4	12,61	326,2	12,84
		B	69,5	2,74	69,5	2,74	69,5	2,74	69,5	2,74
		C	183,25	7,21	185,7	7,31	188,2	7,41	191,1	7,52
		D	13,75	0,54	13,75	0,54	13,75	0,54	13,75	0,54
	36	A	314,5	12,38	319,4	12,57	324,4	12,77	330,2	13,00
		B	71,5	2,81	71,5	2,81	71,5	2,81	71,5	2,81
		C	185,25	7,29	187,7	7,39	190,2	7,49	193,1	7,60
		D	13,75	0,54	13,75	0,54	13,75	0,54	13,75	0,54
	40	A	318,5	12,54	323,4	12,73	328,4	12,93	334,2	13,16
		B	73,5	2,89	73,5	2,89	73,5	2,89	73,5	2,89
		C	187,25	7,37	189,7	7,47	192,2	7,57	195,1	7,68
		D	13,75	0,54	13,75	0,54	13,75	0,54	13,75	0,54
	45	A	323	12,72	327,9	12,91	332,9	13,11	338,7	13,33
		B	75,75	2,98	75,75	2,98	75,75	2,98	75,75	2,98
		C	189,5	7,46	191,95	7,56	194,45	7,66	197,35	7,77
		D	13,75	0,54	13,75	0,54	13,75	0,54	13,75	0,54
	50	A	328	12,91	332,9	13,11	337,9	13,30	343,7	13,53
		B	78,25	3,08	78,25	3,08	78,25	3,08	78,25	3,08
		C	192	7,56	194,45	7,66	196,95	7,75	199,85	7,87
		D	13,75	0,54	13,75	0,54	13,75	0,54	13,75	0,54

GR47 + GR38			GR38 - 2°											
			16		18		20		22		25		28	
			mm	inc	mm	inc	mm	inc	mm	inc	mm	inc	mm	inc
GR47 - 1°	28	A	310	12,205	313	12,32	316	12,44	319	12,55	323,5	12,73	328	12,91
		B	67,5	2,65	67,5	2,65	67,5	2,65	67,5	2,65	67,5	2,65	67,5	2,65
		C	183	7,20	184,5	7,26	186	7,32	187,5	7,38	189,75	7,47	192	7,55
		D	15,9	0,62	15,9	0,62	15,9	0,62	15,9	0,62	15,9	0,62	15,9	0,62
	32	A	314	12,36	317	12,48	320	12,59	323	12,89	327,5	12,89	332	13,07
		B	69,5	2,73	69,5	2,73	69,5	2,73	69,5	2,73	69,5	2,73	69,5	2,73
		C	185	7,28	186,5	7,34	188	7,40	189,5	7,46	191,75	7,54	194	7,63
		D	15,9	0.62	15,9	0.62	15,9	0.62	15,9	0.62	15,9	0.62	15,9	0.62
	36	A	318	12,52	321	12,38	324	12,75	327	12,87	331,5	13,05	336	13,22
		B	71,50	2,81	71,50	2,81	71,50	2,81	71,50	2,81	71,50	2,81	71,50	2,81
		C	187	7,36	188,5	7,42	190	7,48	191,5	7,53	193,75	7,62	196	7,71
		D	15,9	0,62	15,9	0,62	15,9	0,62	15,9	0,62	15,9	0,62	15,9	0,62
	40	A	322	12,67	325	12,79	328	12,91	331	13,03	335,5	13,2	340	13,38
		B	73,50	2,89	73,50	2,89	73,50	2,89	73,50	2,89	73,50	2,89	73,50	2,89
		C	189	7,44	190,5	7,50	192	7,55	193,5	7,61	195,75	7,70	198	7,79
		D	15,9	0.62	15,9	0.62	15,9	0.62	15,9	0.62	15,9	0.62	15,9	0.62
	45	A	326,5	12,85	329,5	12,97	332,5	13,09	335,5	13,20	340	13,38	344,5	13,56
		B	75,75	2,98	75,75	2,98	75,75	2,98	75,75	2,98	75,75	2,98	75,75	2,98
		C	191,25	7,53	192,75	7,58	194,25	7,64	195,75	7,70	198	7,79	200,25	7,88
		D	15,9	0,62	15,9	0,62	15,9	0,62	15,9	0,62	15,9	0,62	15,9	0,62
	50	A	331,5	13,05	334,5	13,16	337,5	13,28	340,5	13,40	345	13,58	349,5	13,76
		B	78,25	3,08	78,25	3,08	78,25	3,08	78,25	3,08	78,25	3,08	78,25	3,08
		C	193,75	7,62	195,25	7,68	196,75	7,74	198,25	7,80	200,5	7,89	202,75	7,98
		D	15,9	0,62	15,9	0,62	15,9	0,62	15,9	0,62	15,9	0,62	15,9	0,62

GR47 + GR47			GR47 - 2°											
			28		32		36		40		45		50	
			mm	inc	mm	inc	mm	inc	mm	inc	mm	inc	mm	inc
GR47 - 1°	28	A	341,5	13,44	345,5	13,60	349,5	13,76	353,5	13,91	358	14,09	363	14,29
		B	67,5	2,66	67,5	2,66	67,5	2,66	67,5	2,66	67,5	2,66	67,5	2,66
		C	196	7,72	198	7,80	200	7,87	202	7,95	204,25	8,04	206,75	8,14
		D	19,5	0,77	19,5	0,77	19,5	0,77	19,5	0,76	19,5	0,77	19,5	0,77
	32	A	345,5	13,60	349,5	13,76	353,5	13,92	357,5	14,07	362	14,25	367	14,45
		B	69,5	2,74	69,5	2,74	69,5	2,74	69,5	2,73	69,5	2,74	69,5	2,74
		C	198	7,80	200	7,87	202	7,95	204	8,03	206,25	8,12	208,75	8,22
		D	19,5	0,77	19,5	0,77	19,5	0,77	19,5	0,76	19,5	0,77	19,5	0,77
	36	A	349,5	13,76	353,5	13,92	357,5	14,07	361,5	14,23	366	14,41	371	14,61
		B	71,5	2,81	71,5	2,81	71,5	2,81	71,5	2,81	71,5	2,81	71,5	2,81
		C	200	7,87	202	7,95	204	8,03	206	8,11	208,25	8,20	210,75	8,30
		D	19,5	0,77	19,5	0,77	19,5	0,77	19,5	0,76	19,5	0,77	19,5	0,77
	40	A	353,5	13,92	357,5	14,07	361,5	14,23	365,5	14,39	370	14,57	375	14,76
		B	73,5	2,89	73,5	2,89	73,5	2,89	73,5	2,89	73,5	2,89	73,5	2,89
		C	202	7,95	204	8,03	206	8,11	208	8,18	210,25	8,28	212,75	8,38
		D	19,5	0,77	19,5	0,77	19,5	0,77	19,5	0,76	19,5	0,77	19,5	0,77
	45	A	358	14,09	362	14,25	366	14,41	370	14,56	374,5	14,74	379,5	14,94
		B	75,75	2,98	75,75	2,98	75,75	2,98	75,75	2,98	75,75	2,98	75,75	2,98
		C	204,25	8,04	206,25	8,12	208,25	8,20	210,25	8,27	212,5	8,37	215	8,46
		D	19,5	0,77	19,5	0,77	19,5	0,77	19,5	0,76	19,5	0,77	19,5	0,77
	50	A	363	14,29	367	14,45	371	14,61	375	14,76	379,5	14,94	384,5	15,14
		B	78,25	3,08	78,25	3,08	78,25	3,08	78,25	3,08	78,25	3,08	78,25	3,08
		C	206,75	8,14	208,75	8,22	210,75	8,30	212,75	8,37	215	8,46	217,5	8,56
		D	19,5	0,77	19,5	0,77	19,5	0,77	19,5	0,76	19,5	0,77	19,5	0,77

Available flanges and shafts for GR47
Flange ed alberi disponibili per GR47

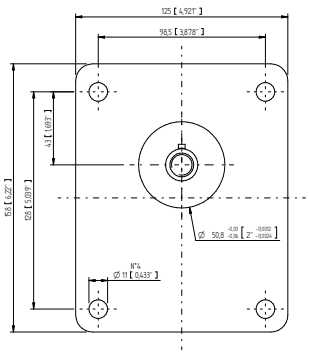

Type flange 3-C9
Flangia tipo 3-C9

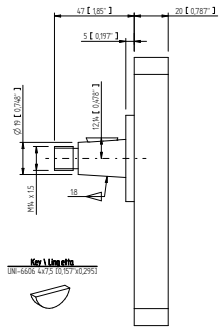

Type shaft 3-C9
Albero tipo 3-C9
Max torque / *Coppia max: 320 Nm*

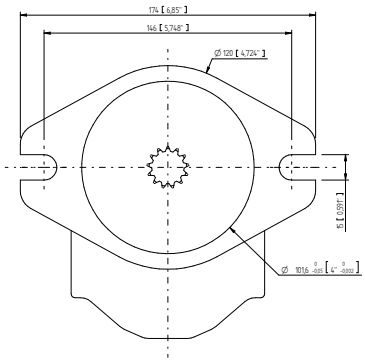

Type flange SAEB-T13
Flangia tipo SAEB-T13

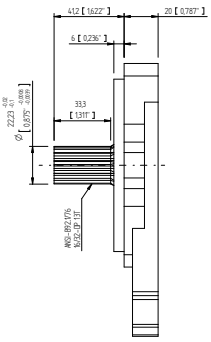

Type shaft SAEB-T13
Albero tipo SAEB-T13
Max torque / *Coppia max: 600 Nm*

SETTIMA research & innovation, always

GR55 - Group 3 tandem pumps

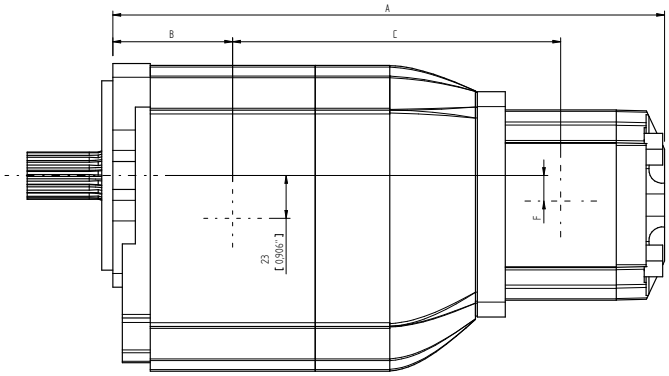

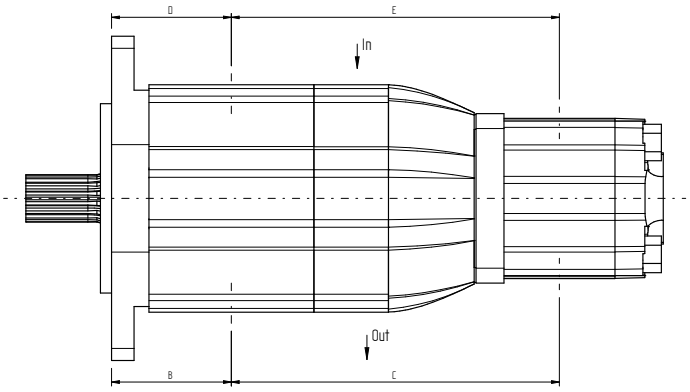

GR55 + GR28				GR28 - 2°									
				4		6		8		10		13	
				mm	inc	mm	inc	mm	inc	mm	inc	mm	inc
GR55 - 1°	50		A	324	12,76	329,5	12,97	334,5	13,17	339,5	13,37	346,4	13,64
			B	81,5	3,21	81,5	3,21	81,5	3,21	81,5	3,21	81,5	3,21
			C	186	7,32	188,75	7,43	191,25	7,53	193,75	7,63	197,2	7,76
			D	81,5	3,21	81,5	3,21	81,5	3,21	81,5	3,21	81,5	3,21
			E	186	7,32	188,75	7,43	191,25	7,53	193,75	7,63	197,2	7,76
			F	11,9	0,47	11,9	0,47	11,9	0,47	11,9	0,47	11,9	0,47
	63		A	333	13,11	338,5	13,33	343,5	13,52	348,5	13,72	355,4	13,99
			B	86	3,39	86	3,39	86	3,39	86	3,39	86	3,39
			C	190,5	7,50	193,25	7,61	195,75	7,71	198,25	7,81	201,7	7,94
		D	O ports	86	3,39	86	3,39	86	3,39	86	3,39	86	3,39
			OE ports	89,5	3,52	89,5	3,52	89,5	3,52	89,5	3,52	89,5	3,52
		E	O ports	190,5	7,50	193,25	7,61	195,75	7,71	198,25	7,81	201,7	7,94
			OE ports	187	7,36	189,75	7,47	192,25	7,57	194,75	7,67	198,2	7,80
			F	11,9	0,47	11,9	0,47	11,9	0,47	11,9	0,47	11,9	0,47
	75		A	341	13,43	346,5	13,64	351,5	13,84	356,5	14,04	363,4	14,31
			B	90	3,54	90	3,54	90	3,54	90	3,54	90	3,54
			C	194,50	7,66	197,25	7,77	199,75	7,86	202,25	7,96	205,7	8,10
		D	O ports	90	3,54	90	3,54	90	3,54	90	3,54	90	3,54
			OE ports	93,5	3,68	93,5	3,68	93,5	3,68	93,5	3,68	93,5	3,68
		E	O ports	194,5	7,66	197,25	7,77	199,75	7,86	202,25	7,96	205,7	8,10
			OE ports	191	7,52	193,75	7,63	196,25	7,73	198,75	7,82	202,2	7,96
			F	11,9	0,47	11,9	0,47	11,9	0,47	11,9	0,47	11,9	0,47
	90		A	352	13,86	357,5	14,07	362,5	14,27	367,5	14,47	374,4	14,74
			B	95,5	3,76	95,5	3,76	95,5	3,76	95,5	3,76	95,5	3,76
			C	200	7,87	202,75	7,98	205,25	8,08	207,75	8,18	211,2	8,31
		D	O ports	95,5	3,76	95,5	3,76	95,5	3,76	95,5	3,76	95,5	3,76
			OE ports	99	3,90	99	3,90	99	3,90	99	3,90	99	3,90
		E	O ports	200	7,87	202,75	7,98	205,25	8,08	207,75	8,18	211,2	8,31
			OE ports	196,5	7,74	199,25	7,84	201,75	7,94	204,25	8,04	207,7	8,18
			F	11,9	0,47	11,9	0,47	11,9	0,47	11,9	0,47	11,9	0,47

GR55 + GR33				GR33 - 2°							
				10		13		15		18	
				mm	inc	mm	inc	mm	inc	mm	inc
GR55 - 1°	50		A	334,5	13,17	339,4	13,36	344,4	13,56	350,2	13,79
			B	81,5	3,21	81,5	3,21	81,5	3,21	81,5	3,21
			C	195,25	7,70	197,7	7,78	200,2	7,88	203,1	8,00
			D	81,5	3,21	81,5	3,21	81,5	3,21	81,5	3,21
			E	195,25	7,69	197,7	7,78	200,2	7,88	203,1	8,00
			F	13,75	0,54	13,75	0,54	13,75	0,54	13,75	0,54
	63		A	343,5	13,52	348,4	13,72	353,4	13,91	359,2	14,14
			B	86	3,39	86	3,39	86	3,39	86	3,39
			C	199,75	7,86	202,2	7,96	204,7	8,06	207,6	8,17
		D	O ports	86	3,39	86	3,39	86	3,39	86	3,39
			OE ports	89,5	3,52	89,5	3,52	89,5	3,52	89,5	3,52
		E	O ports	199,75	7,86	202,2	7,96	204,7	8,06	207,6	8,17
			OE ports	196,25	7,73	198,7	7,82	201,2	7,92	204,1	8,04
			F	13,75	0,54	13,75	0,54	13,75	0,54	13,75	0,54
	75		A	351,5	13,84	356,4	14,03	361,4	14,23	367,2	14,46
			B	90	3,54	90	3,54	90	3,54	90	3,54
			C	203,75	8,02	206,2	8,12	208,7	8,22	211,6	8,33
		F	O ports	90	3,54	90	3,54	90	3,54	90	3,54
			OE ports	93,5	3,68	93,5	3,68	93,5	3,68	93,5	3,68
		G	O ports	203,75	8,02	206,2	8,12	208,7	8,22	211,6	8,33
			OE ports	200,25	7,88	202,7	7,98	205,2	8,08	208,1	8,19
			F	13,75	0,54	13,75	0,54	13,75	0,54	13,75	0,54
	90		A	362,5	14,27	367,4	14,46	372,4	14,66	378,2	14,89
			B	95,5	3,76	95,5	3,76	95,5	3,76	95,5	3,76
			C	209,25	8,24	211,7	8,33	214,2	8,43	217,1	8,55
		D	O ports	95,5	3,76	95,5	3,76	95,5	3,76	95,5	3,76
			OE ports	99	3,90	99	3,90	99	3,90	99	3,90
		E	O ports	209,25	8,24	211,7	8,33	214,2	8,43	217,1	8,55
			OE ports	205,75	8,10	208,2	8,20	210,7	8,30	213,6	8,41
			F	13,75	0,54	13,75	0,54	13,75	0,54	13,75	0,54

GR55 + GR38				GR38 - 2°											
				16		18		20		22		25		28	
				mm	inc	mm	inc	mm	inc	mm	inc	mm	inc	mm	inc
GR55 - 1°	50		A	338	13,31	341	13,43	344	13,54	347	13,66	351,5	13,84	356	14,02
			B	81,5	3,21	81,5	3,21	81,5	3,21	81,5	3,21	81,5	3,21	81,5	3,21
			C	197	7,76	198,5	7,81	200	7,87	201,5	7,93	203,75	8,02	206	8,11
			D	81,5	3,21	81,5	3,21	81,5	3,21	81,5	3,21	81,5	3,21	81,5	3,21
			E	197	7,76	198,5	7,81	200	7,87	201,5	7,93	203,75	8,02	206	8,11
			F	15,9	0,63	15,9	0,63	15,9	0,63	15,9	0,63	15,9	0,63	15,9	0,63
	63		A	347	13,66	350	13,78	353	13,90	356	14,02	360,5	14,19	365	14,37
			B	86	3,39	86	3,39	86	3,39	86	3,39	86	3,39	86	3,39
			C	201,5	7,93	203	7,99	204,5	8,05	206	8,11	208,25	8,20	210,5	8,29
		D	O ports	86	3,39	86	3,39	86	3,39	86	3,39	86	3,39	86	3,39
			OE ports	89,5	3,52	89,5	3,52	89,5	3,52	89,5	3,52	89,5	3,52	89,5	3,52
		E	O ports	201,5	7,93	203	7,99	204,5	8,05	206	8,11	208,25	8,20	210,5	8,29
			OE ports	198	7,80	199,5	7,85	201	7,91	202,5	7,97	204,75	8,06	207	8,15
			F	15,9	0,63	15,9	0,63	15,9	0,63	15,9	0,63	15,9	0,63	15,9	0,63

SETTIMA® research & innovation, always

GR55 + GR38				GR38 - 2°											
				16		18		20		22		25		28	
				mm	inc	mm	inc	mm	inc	mm	inc	mm	inc	mm	inc
GR55 - 1°	75		A	355	13,98	358	14,09	361	14,21	364	14,33	368,5	14,51	373	14,69
			B	90	3,54	90	3,54	90	3,54	90	3,54	90	3,54	90	3,54
			C	205,5	8,09	207	8,15	208,5	8,21	210	8,27	212,25	8,36	214,5	8,44
		D	O ports	90	3,54	90	3,54	90	3,54	90	3,54	90	3,54	90	3,54
			OE ports	93,5	3,68	93,5	3,68	93,5	3,68	93,5	3,68	93,5	3,68	93,5	3,68
		E	O ports	205,5	8,09	207	8,15	208,5	8,21	210	8,27	212,25	8,36	214,5	8,44
			OE ports	202	7,95	203,5	8,01	205	8,07	206,5	8,13	208,75	8,22	211	8,31
			F	15,9	0,63	15,9	0,63	15,9	0,63	15,9	0,63	15,9	0,63	15,9	0,63
	90		A	366	14,40	369	14,52	372	14,64	375	14,76	379,5	14,94	384	15,11
			B	95,5	3,76	95,5	3,76	95,5	3,76	95,5	3,76	95,5	3,76	95,5	3,76
			C	211	8,3	212,5	8,36	214	8,42	215,5	8,48	217,75	8,57	220	8,66
		D	O ports	95,5	3,76	95,5	3,76	95,5	3,76	95,5	3,76	95,5	3,76	95,5	3,76
			OE ports	99	3,89	99	3,89	99	3,89	99	3,89	99	3,89	99	3,89
		E	O ports	211	8,30	212,5	8,36	214	8,42	215,5	8,48	217,75	8,57	220	8,66
			OE ports	207,5	8,16	209	8,22	210,5	8,28	212	8,34	214,25	8,43	216,5	8,52
			F	15,9	0,62	15,9	0,62	15,9	0,62	15,9	0,62	15,9	0,62	15,9	0,62

GR55 + GR47				GR47 - 2°											
				28		32		36		40		45		50	
				mm	inc	mm	inc	mm	inc	mm	inc	mm	inc	mm	inc
GR55 - 1°	50		A	377,5	14,86	381,5	15,02	385,5	15,18	389,5	15,33	394	15,51	399	15,71
			B	81,5	3,21	81,5	3,21	81,5	3,21	81,5	3,21	81,5	3,21	81,5	3,21
			C	218	8,58	220	8,66	222	8,74	224	8,82	226,25	8,91	228,75	9,01
			D	81,5	3,21	81,5	3,21	81,5	3,21	81,5	3,21	81,5	3,21	81,5	3,21
			E	218	8,58	220	8,66	222	8,74	224	8,82	226,25	8,91	228,75	9,01
			F	19,5	0,77	19,5	0,77	19,5	0,77	19,5	0,77	19,5	0,77	19,5	0,77
	63		A	386,5	15,22	390,5	15,37	394,5	15,53	398,5	15,69	403	15,87	408	16,06
			B	86	3,39	86	3,39	86	3,39	86	3,39	86	3,39	86	3,39
			C	222,5	8,76	224,5	8,84	226,5	8,92	228,5	9,00	230,75	9,08	233,25	9,18
		D	O ports	86	3,39	86	3,39	86	3,39	86	3,39	86	3,39	86	3,39
			OE ports	89,5	3,52	89,5	3,52	89,5	3,52	89,5	3,52	89,5	3,52	89,5	3,52
		E	O ports	222,5	8,76	224,5	8,84	226,5	8,92	228,5	9,00	230,75	9,08	233,25	9,18
			OE ports	219	8,62	221	8,70	223	8,78	225	8,86	227,25	8,95	229,75	9,05
			F	19,5	0,77	19,5	0,77	19,5	0,77	19,5	0,77	19,5	0,77	19,5	0,77
	75		A	394,5	15,53	398,5	15,69	402,5	15,85	406,5	16,00	411	16,18	416	16,38
			B	90	3,54	90	3,54	90	3,54	90	3,54	90	3,54	90	3,54
			C	226,5	8,92	228,5	9,00	230,5	9,07	232,5	9,15	234,75	9,24	237,25	9,34
		D	O ports	90	3,54	90	3,54	90	3,54	90	3,54	90	3,54	90	3,54
			OE ports	93,5	3,68	93,5	3,68	93,5	3,68	93,5	3,68	93,5	3,68	93,5	3,68
		E	O ports	226,5	8,91	225,5	8,99	230,5	9,07	232,5	9,15	234,75	9,24	237,25	9,34
			OE ports	223	8,78	225	8,85	227	8,93	229	9,01	231,25	9,10	233,75	9,20
			F	19,5	0,77	19,5	0,77	19,5	0,77	19,5	0,77	19,5	0,77	19,5	0,77
	90		A	405,5	15,96	409,5	16,12	413,5	16,28	417,5	16,44	422	16,61	427	16,81
			B	95,5	3,76	95,5	3,76	95,5	3,76	95,5	3,76	95,5	3,76	95,5	3,76
			C	232	9,13	234	9,21	236	9,29	238	9,37	240,25	9,46	242,75	9,56
		D	O ports	95,5	3,76	95,5	3,76	95,5	3,76	95,5	3,76	95,5	3,76	95,5	3,76
			OE ports	99	3,90	99	3,90	99	3,90	99	3,90	99	3,90	99	3,90
		E	O ports	232	9,13	234	9,21	236	9,29	238	9,37	240,25	9,46	242,75	9,56
			OE ports	228,5	9,00	230,5	9,07	232,5	9,15	234,5	9,23	236,75	9,32	239,5	9,43
			F	19,5	0,77	19,5	0,77	19,5	0,77	19,5	0,77	19,5	0,77	19,5	0,77

GR55 + GR55				2°															
				50				63				75				90			
				mm		inc		mm		inc		mm		inc		mm		inc	
				O	OE	O	OE	O	OE	O	OE	O	OE	O	OE	O	OE	O	OE
1°	50		A	395		15,55		404		15,91		412		16,22		423		16,65	
			B	81,5		3,21		81,5		3,21		81,5		3,21		81,5		3,2	
			C	227		8,94		231,5		9,11		235,5		9,27		241		9,48	
			D	81,5		3,21		81,5		3,21		81,5		3,21		81,5		3,2	
			E	227		8,94		231,5		9,11		235,5		9,27		241		9,48	
			F	23		0,91		23		0,91		23		0,91		23		0,9	
	63		A	404		15,91		413		16,26		421		16,57		432		17,01	
			B	86		3,39		86		3,39		86		3,39		86		3,39	
			C	231,5		9,11		236		9,29		240		9,45		245,5		9,67	
		D	O ports	86		3,39		86		3,39		86		3,39		86		3,39	
			OE ports	89,5		3,52		89,5		3,52		89,5		3,52		89,5		3,52	
		E	O ports	231,5		9,11		236	239,5	9,29	9,43	240	243,5	9,45	9,59	245,5	249	9,67	9,80
			OE ports	228		8,98		232,5	236	9,15	9,29	236,5	240	9,31	9,45	242	245,5	9,53	9,67
			F	23		0,91		23		0,91		23		0,91		23		0,91	
	75		A	412		16,22		421		16,57		429		16,89		440		17,32	
			B	90		3,54		90		3,54		90		3,54		90		3,54	
			C	235,5		9,27		240		9,45		244		9,61		249,5		9,82	
		F	O ports	90		3,54		90		3,54		90		3,54		90		3,54	
			OE ports	93,5		3,68		93,5		3,68		93,5		3,68		93,5		3,68	
		G	O ports	235,5		9,27		240	243,5	9,45	9,59	244	247,5	9,61	9,74	249,5	253	9,82	9,96
			OE ports	232		9,13		236,5	240	9,31	9,45	240,5	244	9,47	9,61	246	249,5	9,69	9,82
			F	23		0,91		23		0,91		23		0,91		23		0,91	
	90		A	423		16,65		432		17,01		440		17,32		451		17,76	
			B	95,5		3,76		95,5		3,76		95,5		3,76		95,5		3,76	
			C	241		9,49		245,5		9,67		249,5		9,82		255		10,04	
		D	O ports	95,5		3,76		95,5		3,76		95,5		3,76		95,5		3,76	
			OE ports	99		3,90		99		3,90		99		3,90		99		3,90	
		E	O ports	241		9,49		245,5	249	9,67	9,80	249,5	253	9,82	9,96	255	258,5	10,04	10,18
			OE ports	237,5		9,35		242	245,5	9,53	9,67	246	249,5	9,69	9,82	251,5	255	9,90	10,04
			F	23		0,91		23		0,91		23		0,91		23		0,91	

Available flanges and shafts for GR55
Flange ed alberi disponibili per GR55

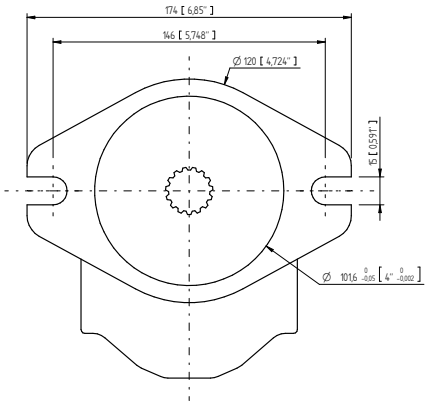

Type flange SAEB-T15
Flangia tipo SAEB-T15

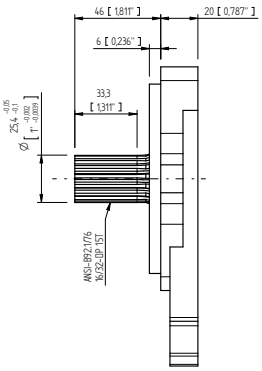

Type shaft SAEB-T15
Albero tipo SAEB-T15
Max torque / *Coppia max: 700 Nm*

GR72 - Group 4 tandem pumps

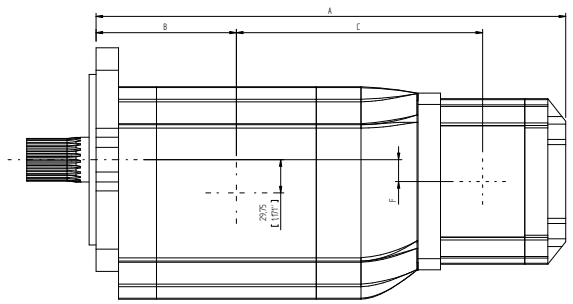

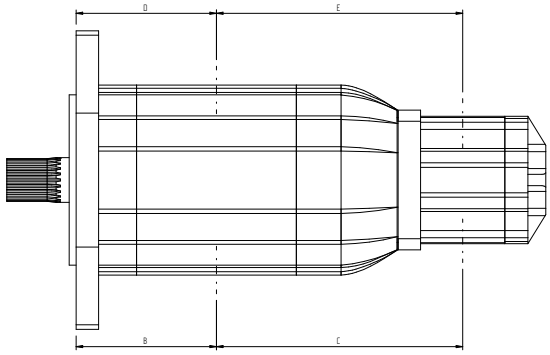

GR72 + GR47			GR47 - 2°											
			28		32		36		40		45		50	
			mm	inc	mm	inc	mm	inc	mm	inc	mm	inc	mm	inc
GR72 - 1°	94	A	430,5	16,95	434,5	17,11	438,5	17,26	442,5	17,42	447	17,60	452	17,80
		B	125,5	4,94	125,5	4,94	125,5	4,94	125,5	4,94	125,5	4,94	125,5	4,94
		C	227	8,94	229	9,02	231	9,09	233	9,17	235,25	9,26	237,75	9,36
		D	128,5	5,06	128,5	5,06	128,5	5,06	128,5	5,06	128,5	5,06	128,5	5,06
		E	224	8,82	226	8,90	228	8,98	230	9,06	232,25	9,14	234,75	9,24
		F	19,5	0,77	19,5	0,77	19,5	0,77	19,5	0,77	19,5	0,77	19,5	0,77
	101	A	433,5	17,07	437,5	17,22	441,5	17,38	445,5	17,54	450	17,72	455	17,91
		B	127	5,00	127	5,00	127	5,00	127	5,00	127	5,00	127	5,00
		C	228,5	9,00	230,5	9,07	232,5	9,15	234,5	9,23	236,75	9,32	239,25	9,42
		D	134	5,28	134	5,28	134	5,28	134	5,28	134	5,28	134	5,28
		E	221,5	8,72	223,5	8,80	225,5	8,88	227,5	8,96	229,75	9,05	232,25	9,14
		F	19,5	0,77	19,5	0,77	19,5	0,77	19,5	0,77	19,5	0,77	19,5	0,77
	125	A	443,5	17,46	447,5	17,62	451,5	17,78	455,5	17,93	460	18,11	465	18,31
		B	132	5,20	132	5,20	132	5,20	132	5,20	132	5,20	132	5,20
		C	233,5	9,19	235,5	9,27	237,5	9,35	239,5	9,43	241,75	9,52	244,25	9,62
		D	145	5,71	145	5,71	145	5,71	145	5,71	145	5,71	145	5,71
		E	220,5	8,68	222,5	8,76	224,5	8,84	226,5	8,92	228,75	9,01	231,25	9,10
		F	19,5	0,77	19,5	0,77	19,5	0,77	19,5	0,77	19,5	0,77	19,5	0,77
	150	A	454	17,87	458	18,03	462	18,19	466	18,35	470,5	18,52	475,5	18,72
		B	137,25	5,40	137,25	5,40	137,25	5,40	137,25	5,40	137,25	5,40	137,25	5,40
		C	238,75	9,40	240,75	9,48	242,75	9,56	244,75	9,64	247	9,72	249,5	9,82
		D	150,25	5,92	150,25	5,92	150,25	5,92	150,25	5,92	150,25	5,92	150,25	5,92
		E	225,75	8,89	227,5	8,96	229,75	9,05	231,75	9,12	234	9,21	236,5	9,31
		F	19,5	0,77	19,5	0,77	19,5	0,77	19,5	0,77	19,5	0,77	19,5	0,77
	175	A	464	18,27	468	18,43	472	18,58	476	18,74	480,5	18,92	485,5	19,11
		B	142,25	5,60	142,25	5,60	142,25	5,60	142,25	5,60	142,25	5,60	142,25	5,60
		C	243,75	9,60	245,75	9,68	247,75	9,75	249,75	9,83	252	9,92	254,5	10,02
		D	155,25	6,11	155,25	6,11	155,25	6,11	155,25	6,11	155,25	6,11	155,25	6,11
		E	230,75	9,08	232,75	9,16	234,75	9,24	236,75	9,32	239	9,41	241,5	9,51
		F	19,5	0,77	19,5	0,77	19,5	0,77	19,5	0,77	19,5	0,77	19,5	0,77
	200	A	474,5	18,68	478,5	18,84	482,5	19,00	486,5	19,15	491	19,33	496	19,53
		B	147,5	5,81	147,5	5,81	147,5	5,81	147,5	5,81	147,5	5,81	147,5	5,81
		C	249	9,80	251	9,88	253	9,96	255	10,04	257,25	10,13	259,75	10,23
		D	160,5	6,32	160,5	6,32	160,5	6,32	160,5	6,32	160,5	6,32	160,5	6,32
		E	236	9,29	238	9,37	240	9,45	242	9,53	244,25	9,62	246,75	9,71
		F	19,5	0,77	19,5	0,77	19,5	0,77	19,5	0,77	19,5	0,77	19,5	0,77

GR72 + GR55			GR55 - 2°															
			50				63				75				90			
			mm		inc		mm		inc		mm		inc		mm		inc	
			O	OE	O	OE	O	OE	O	OE	O	OE	O	OE	O	OE	O	OE
GR72 - 1°	94	A	448		17,64		457		17,99		465		18,31		476		18,74	
		B	125,5		4,94		125,5		4,94		125,5		4,94		125,5		4,94	
		C	236		9,29		240,5		9,47		244,5		9,63		250		9,84	
		D	128,5		5,06		128,5		5,06		128,5		5,06		128,5		5,06	
		E	233		9,17		237,5	241	9,35	9,48	241	245	9,50	9,64	247	250,5	9,72	9,86
		F	23		0,91		23		0,9		23		0,9		23		0,9	
	101	A	451		17,76		460		18,11		468		18,42		479		18,85	
		B	127		5,00		127		5,00		127		5,00		127		5,00	
		C	237,5		9,35		242		9,52		246		9,68		251,5		9,9	
		D	134		5,28		134		5,28		134		5,28		134		5,28	
		E	230,5		9,07		235	238,5	9,25	9,39	239	242,5	9,4	9,54	244,5	248	9,62	9,76
		F	23		0,91		23		0,91		23		0,91		23		0,91	
	125	A	461		18,15		470		18,5		478		18,81		489		19,25	
		B	132		5,20		132		5,20		132		5,20		132		5,20	
		C	242,5		9,55		247		9,72		251		9,88		256,5		10,09	
		D	145		5,71		145		5,71		145		5,71		145		5,71	
		E	234,7		9,24		234	237,5	9,21	9,35	238	241,5	9,37	9,5	243,5	247	9,58	9,72
		F	23		0,91		23		0,91		23		0,91		23		0,91	
	150	A	471,5		18,56		480,5		18,91		488,5		19,23		499,5		19,66	
		B	137,25		5,40		137,25		5,40		137,25		5,40		137,25		5,40	
		C	247,7		9,75		252,2		9,93		256,2		10,09		261,7		10,30	
		D	150,25		5,91		150,25		5,91		150,25		5,91		150,25		5,91	
		E	234,75		9,24		239,2	242,7	9,41	9,55	243,2	246,7	9,57	9,71	248,7	252,2	9,7	9,93
		F	23		0,91		23		0,91		23		0,91		23		0,91	
	175	A	481,5		18,96		490,5		19,31		498,5		19,62		509,5		20,05	
		B	142,25		5,60		142,25		5,60		142,25		5,60		142,25		5,60	
		C	252,75		9,95		257,25		10,12		261,25		10,28		266,75		10,50	
		D	155,25		6,11		155,25		6,11		155,25		6,11		155,25		6,11	
		E	239,75		9,44		244,2	247,7	9,61	9,75	248,2	251,7	9,77	9,91	253,7	257,2	9,99	10,12
		F	23		0,91		23		0,91		23		0,91		23		0,91	
	200	A	492		19,37		501		19,72		509		20,04		520		20,47	
		B	147,5		5,81		147,5		5,81		147,5		5,81		147,5		5,81	
		C	258		10,16		262,5		10,33		266,5		10,49		272		10,71	
		D	160,5		6,32		160,5		6,32		160,5		6,32		160,5		6,32	
		E	245		9,64		249,5	253	9,82	9,96	253,5	257	9,98	10,11	259	262,5	10,19	10,33
		F	23		0,91		23		0,91		23		0,91		23		0,91	

SETTIMA®
research & innovation, always

GR72 + GR72			GR72 - 2°											
			94		100		125		150		175		200	
			mm	inc	mm	inc	mm	inc	mm	inc	mm	inc	mm	inc
GR72 - 1°	94	A	559,8	22,03	562,8	22,15	572,8	22,55	583,3	22,96	593,3	23,35	603,8	23,77
		B	125,5	4,94	125,5	4,94	125,5	4,94	125,5	4,94	125,5	4,94	125,5	4,94
		C	314,8	12,39	316,3	12,45	321,3	12,65	326,55	12,86	331,55	13,05	336,8	13,26
		D	128,5	5,06	128,5	5,06	128,5	5,06	128,5	5,06	128,5	5,06	128,5	5,06
		E	314,8	12,39	320,3	12,61	331,3	13,04	336,5	13,25	341,55	13,45	346,8	13,65
		F	29,75	1,17	29,75	1,17	29,75	1,17	29,75	1,17	29,75	1,17	29,75	1,17
	101	A	562,8	22,16	565,8	22,28	575,8	22,67	586,3	23,08	596,3	23,48	606,8	23,89
		B	127	5,00	127	5,00	127	5,00	127	5,00	127	5,00	127	5,00
		C	316,3	12,45	317,8	12,51	322,8	12,71	328	12,91	333	13,11	338,3	13,32
		D	134	5,28	134	5,28	134	5,28	134	5,28	134	5,28	134	5,28
		E	312,3	12,30	317,8	12,51	328,8	12,94	334	13,15	339	13,35	344,3	13,56
		F	29,75	1,17	29,75	1,17	29,75	1,17	29,75	1,17	29,75	1,17	29,75	1,17
	125	A	572,8	22,55	575,8	22,67	585,8	23,06	596,3	23,48	606,3	23,87	616,8	24,28
		B	132	5,20	132	5,20	132	5,20	132	5,20	132	5,20	132	5,20
		C	321,3	12,65	322,8	12,71	327,8	12,91	333	13,11	338	13,31	343	13,50
		D	145	5,71	145	5,71	145	5,71	145	5,71	145	5,71	145	5,71
		E	311,3	12,26	316,8	12,47	327,8	12,91	333	13,11	338	13,31	343,3	13,52
		F	29,75	1,17	29,75	1,17	29,75	1,17	29,75	1,17	29,75	1,17	29,75	1,17
	150	A	583,3	22,96	586,3	23,08	596,3	23,48	606,8	23,89	616,8	24,28	627,3	24,70
		B	137,25	5,40	137,25	5,40	137,25	5,40	137,25	5,40	137,25	5,40	137,25	5,40
		C	326,55	12,85	328	12,91	333	13,11	338,3	13,32	343,3	13,52	348,5	13,72
		D	150,25	5,91	150,25	5,91	150,25	5,91	150,25	5,91	150,25	5,91	150,25	5,91
		E	316,55	12,46	322	12,67	333	13,11	338,3	13,31	343,3	13,51	348,55	13,72
		F	29,75	1,17	29,75	1,17	29,75	1,17	29,75	1,17	29,75	1,17	29,75	1,17
	175	A	593,3	23,36	596,3	23,47	606,3	23,87	616,8	24,28	626,8	24,67	637,3	25,09
		B	142,25	5,60	142,2	5,60	142,2	5,60	142,2	5,60	142,2	5,60	142,2	5,60
		C	331,55	13,05	330	13,11	338	13,30	343,3	13,51	348,3	13,71	353,55	13,91
		D	155,25	6,11	155,25	6,11	155,25	6,11	155,25	6,11	155,25	6,11	155,25	6,11
		E	321,55	12,65	327	12,87	338	13,3	343,3	13,51	348,3	13,71	353,55	13,91
		F	29,75	1,17	29,75	1,17	29,75	1,17	29,75	1,17	29,75	1,17	29,75	1,17
	200	A	603,8	23,77	606,8	23,89	616,8	24,28	627,3	24,69	637,3	25,09	647,8	25,5
		B	147,5	5,8	147,5	5,8	147,5	5,8	147,5	5,8	147,5	5,8	147,5	5,8
		C	336,8	13,26	338,3	13,31	343,3	13,51	348,55	13,72	353,55	13,91	358,8	14,12
		D	160,5	6,31	160,5	6,31	160,5	6,31	160,5	6,31	160,5	6,31	160,5	6,31
		E	326,8	12,86	332,3	13,08	343,3	13,51	348,55	13,72	353,55	13,91	358,8	14,12
		F	29,75	1,17	29,75	1,17	29,75	1,17	29,75	1,17	29,75	1,17	29,75	1,17

Available flanges and shafts for GR72
Flange ed alberi disponibili per GR72

Type flange SAED-23T
Flangia tipo SAED-23T

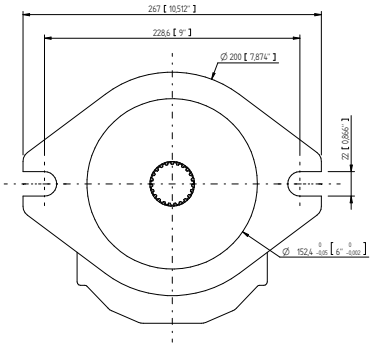

Type shaft SAED-23T
Albero tipo SAED-23T
Max torque / *Coppia max: 1200 Nm*

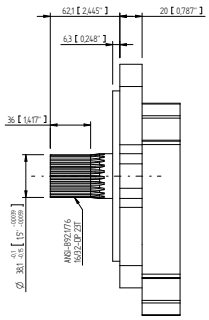

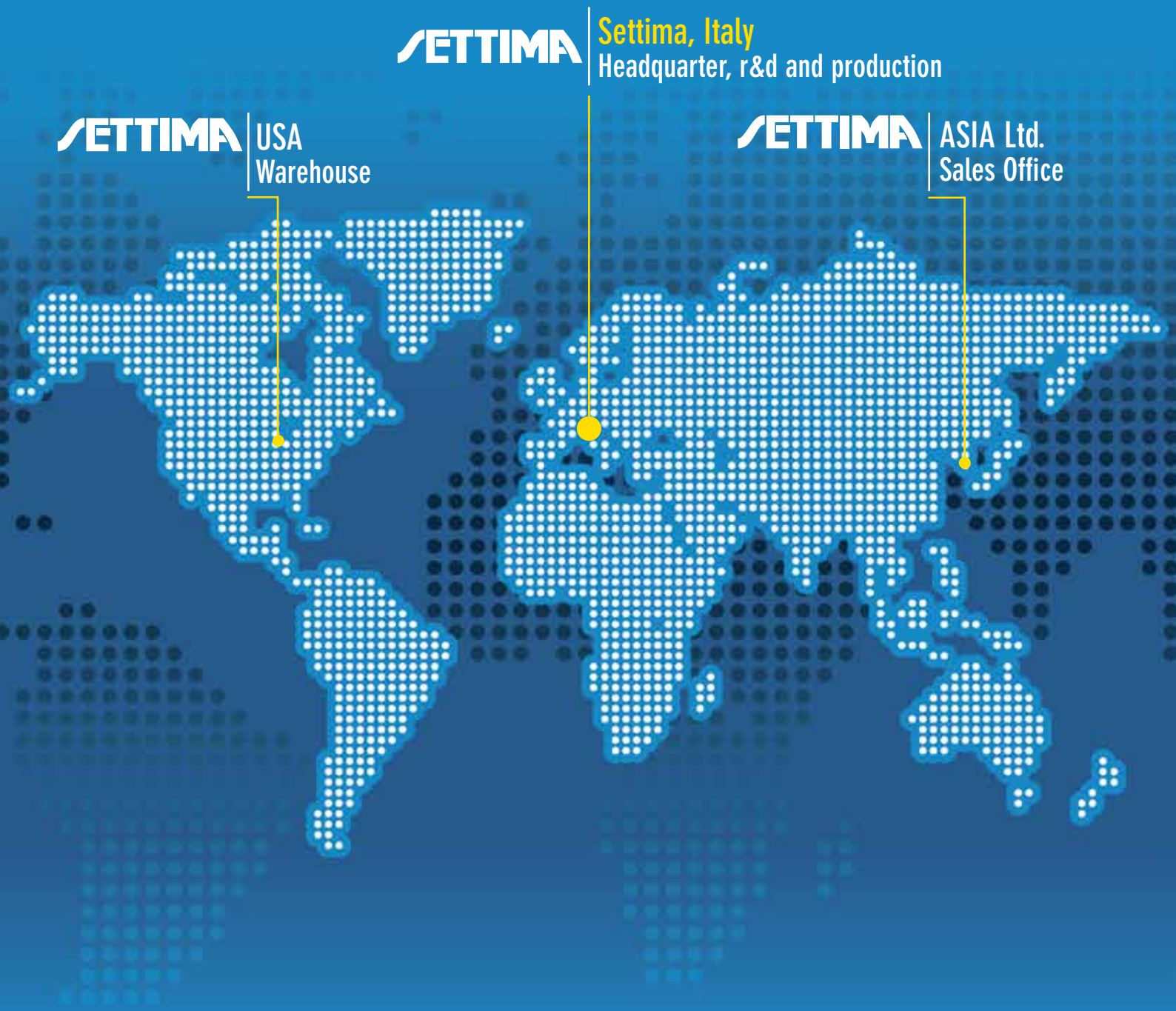

Settima Meccanica Srl
Settima - 29020 Piacenza (Italia)
tel. +39 0523.3650
fax +39 0523.3650299
www.settima.it
info@settima.it

SETTIMA®
research & innovation, always

Nov2016